TIG/INS50

TIGER GARDEN SHELTER

GENERAL ASSEMBLY INSTRUCTIONS

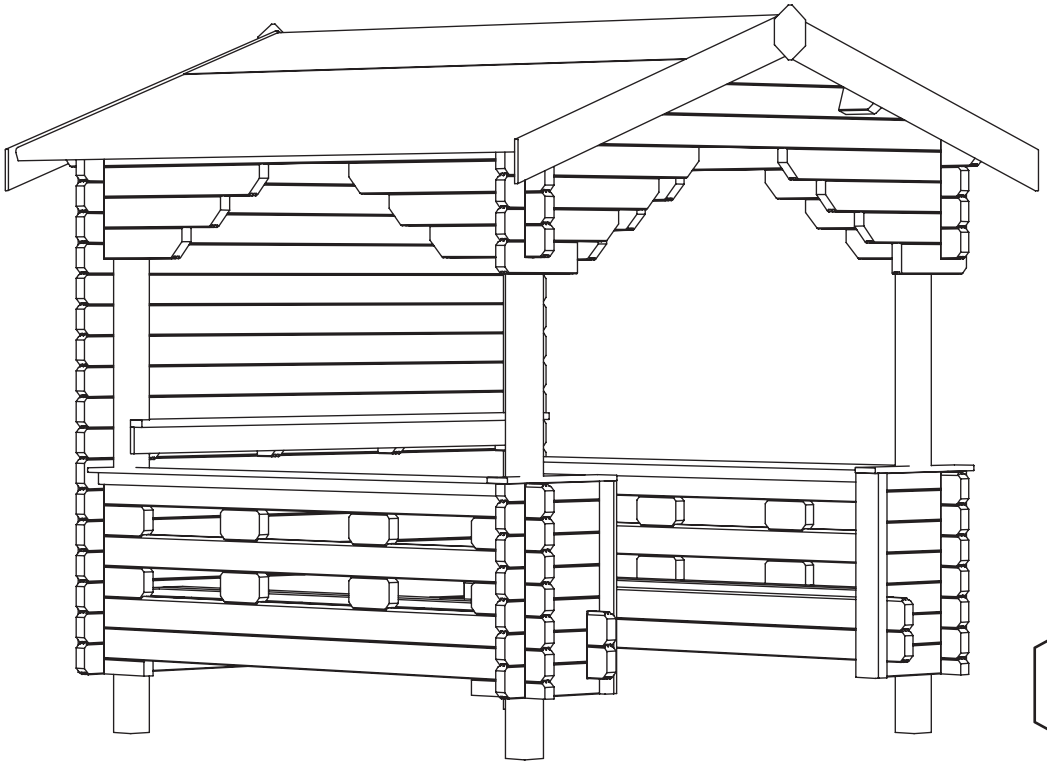

tiger®

PLEASE READ INSTRUCTIONS CAREFULLY

- Check the pack and make sure you have all the parts listed.
- When you are ready to start, make sure you have the right tools at hand (not supplied).
- Ensure there is plenty of space and a clean dry area for assembly.

TIMBER

As with all natural materials, timber can be affected during various weather conditions. For the duration of heavy or extended periods of rain, swelling of the wood logs may occur. Warping of the wood may also occur during excessive dry spells due to an interior moisture loss. Unfortunately, these processes cannot be avoided but can be mitigated. It is suggested that the outdoor building is sprayed with water during extended periods of warm sunshine and sheltered as much as possible during rain or snow.



Please do not paint or treat your cabin timbers before assembly as they must stay dry for a snug tongue and groove fit. To validate your guarantee and ensure longevity of the product, it is ESSENTIAL that your building is treated with an appropriate high-quality water-resistant preservative AFTER assembly, both internally and externally, then annually thereafter.

BUILDING A BASE

Care must be taken to ensure the product is placed on a suitable base. When thinking about where the building and base is going to be constructed, ensure that there will be access to all sides for maintenance work and annual treatment.

Ensure the base is firm and level and is built on firm ground, to prevent distortion.

The constructed base must be at least the size of tanalised floor bearers as referenced in supplied construct diagram. It is also recommended that the floor be at least 25mm above the surrounding ground level to avoid flooding.

TYPES OF BASE

- Durable plastic grid*.
- Concrete 75mm laid on top of 75mm hard-core.
- Slabs laid on 50mm of sharp sand.
- Timber base - Self constructed/Buy pre-made.



We recommend a Fastfit EcoBase for your building. It is durable, lightweight, flexible, and easy to put in place. Please see tigersheds.com for details.

CAUTION:
All buildings should be erected by two competent adults.



CAUTION:
It is advisable to wear safety gloves during building installation.



Whilst all products manufactured are made to the highest standards of safety, we cannot accept responsibility for your safety whilst erecting or using this product.

FSC
www.fsc.org

The mark of responsible forestry

FSC® C125286

MADE IN THE UK SINCE 1913.
We have been making our high quality, great value garden buildings here in Britain for decades.

GO WITH THE PRO!

We understand how busy life can be. Our Pro-Installation service can take the stress and strain out of assembling your quality Tiger building for you. We recommend using professional and dedicated installers to erect your building. With their knowledge and experience, they will ensure that your cabin is put properly in place ready for you to enjoy your space for years to come.

If you have not booked our Pro-Installation service and would like to arrange an installation, please contact our friendly customer support team on **0113 205 4189** (Mon – Fri 9am-5pm) or email **sales@tigersheds.com**.

- The pro-install team will contact you to arrange a suitable time and date for the fitting.
- Sit back, relax and let our professional home installation service do all the hard work for you!
- Please view the Pro Installation page on tigersheds.com for full terms & conditions and to see if your postcode area is covered by our Pro-Install teams.

BEFORE YOU GET STARTED

TOOLS REQUIRED

We recommend using the following tools (not supplied):





FIXING KIT CONTENTS:

- **CN20** Clout Nails ***(20mm Galvanised - QTY 300)***
- **N40** Nails ***(40mm Galvanised - QTY 30)***
- **N65** Nails ***(65mm Galvanised - QTY 500)***
- **BG40** Nails ***(40mm Galvanised Annular - QTY 400)***
- **CB40** M6 Coach Bolts ***(40mm - QTY 8)***
- **S40** Screws ***(40mm - QTY 60)***
- **S60** Screws ***(60mm - QTY 8)***
- **S80** Screws ***(80mm - QTY 16)***

Unpacking supplied cabin.

- Remove all wrapping from delivery. From top to bottom, cut banding holding all components together and remove the cabin components.
  NOTE: PARTS MAY HAVE BECOME LOOSE OR MOVED DURING TRANSPORTATION.
- Lay components on a dry, horizontal surface.

BUILDING PACK CONTENTS:

For full details of what should be included please see the Product Construct Diagram and itemised cutting list that is supplied with the delivery. They are also available on request in pdf form from our helpful Customer Support team – please call **0113 205 4189** or use the Items Delivered Query form at **tigersheds.com/contact**.

ASSEMBLY

- Assembly is straightforward if you follow these step-by-step instructions.
- We recommend getting everything aligned properly before screwing together and that screw holes should be pre-drilled to avoid splitting the timber. (Do not come pre-drilled).

IMPORTANT

- Before assembly, please make sure you have a suitable base ready to erect your building on.
- Your base **MUST** be firm and level to ensure that the building is assembled properly and is square.
- Please carefully remove the packaging and unpack the components in your delivery.
  NOTE: ADDITIONAL TIMBER MAY BE INCLUDED AS PACKING MATERIALS.
- **DO NOT** start your build until you have checked that all the parts of your building are present and in a suitable condition.
- If you are organising a third party to install your building, it is best practice not to schedule this immediately on receipt of your order, to give you time to check your delivery.

Step 1:

UNPACKING CABIN COMPONENTS:

- Unpack all components from your supplied cabin pack(s) and place each individual component in the correct order using the supplied construct diagram and parts list as a guide. Ensure all components are present and in the correct position before beginning assembly.
- Each log interlocks in a staggered pattern.
  NOTE: SOME LOGS FEATURE ADDITIONAL FULL NOTCHES & HALF NOTCHES.
- Before securing, ensure that the logs are fitted properly in their respective tongue and grooves, gently tapping down with a mallet. ***(Detail A1 & A2)***

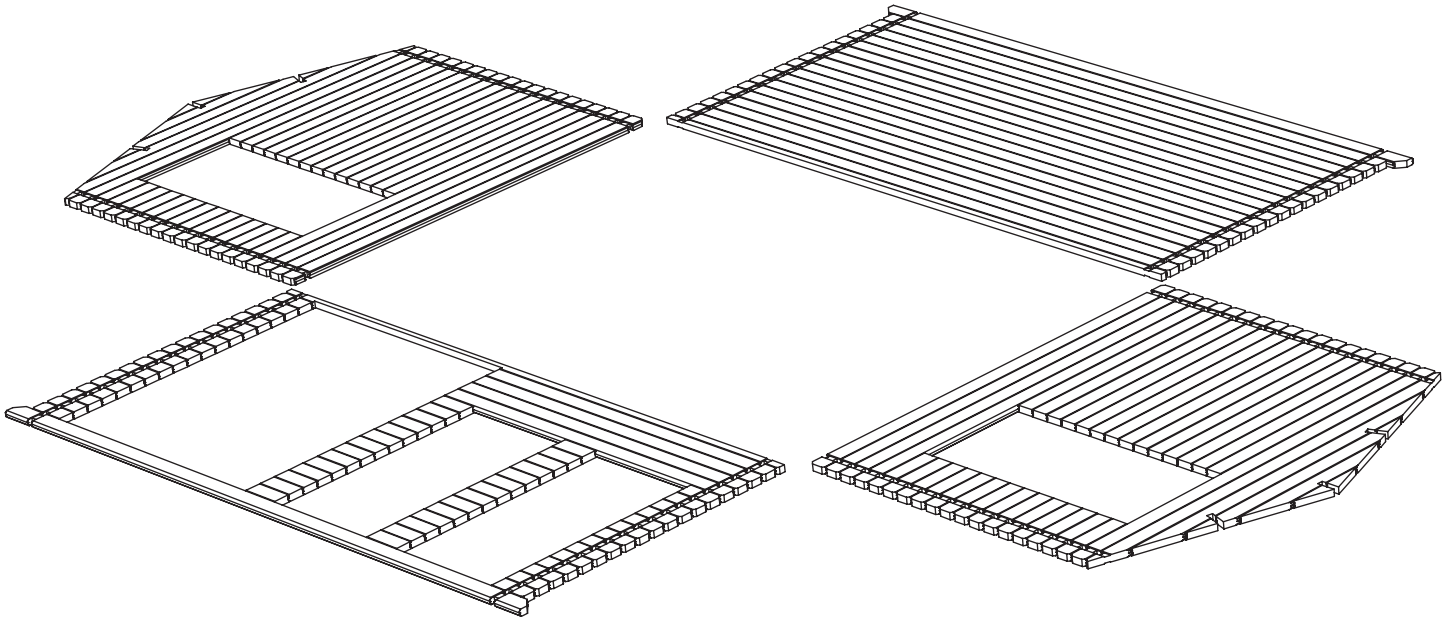

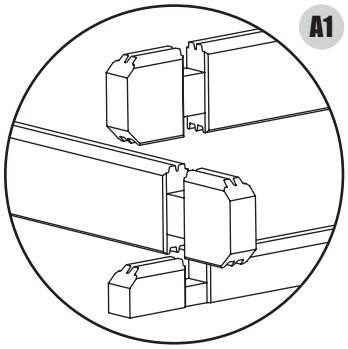

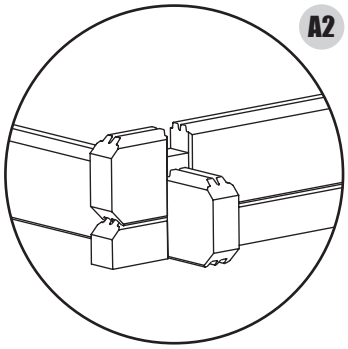

TOP TIP
Use packing materials to protect when tapping logs into place.

Step 2:

FIX UPRIGHT POSTS TO GABLE TOPS

- Lay gable top on flat, dry surface.
- Position the angled end of post in position as shown. ***(Detail B1)***
- Secure through gable top into post using 2x S60 per side. ***(Detail B2)***
- Repeat for other post.
- Repeat process for remaining gable header.

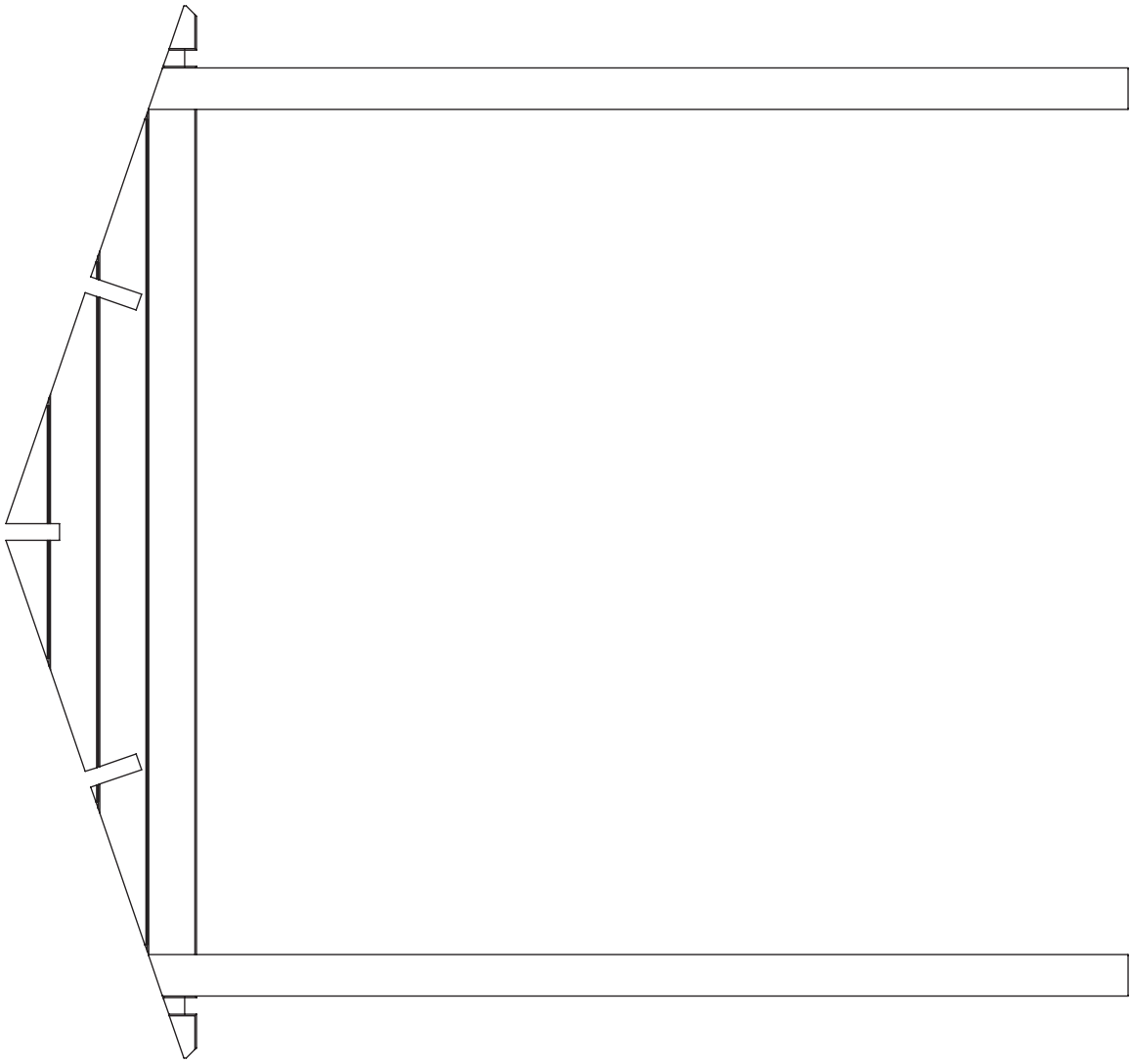

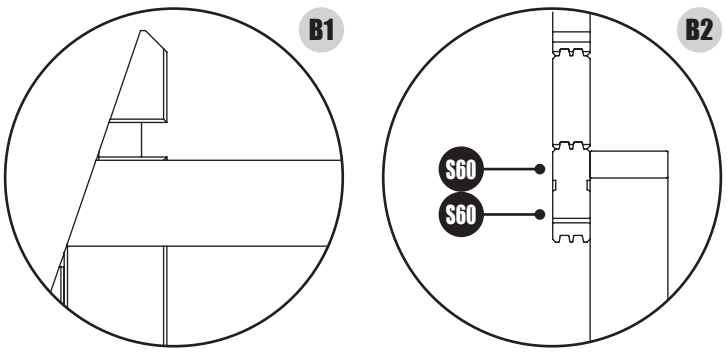

Step 3:

FIT TOP RAILS IN PLACE

- Lift assembled gable frames into position.
- Lift top logs into place, interlocking with gable header. ***(Detail C1)***
- Measure corner to corner diagonally to make sure cabin floor is square. ***(Detail C2)***
- If both values are equal, your frame is square. Realign the floor until square. Do not trim.
- Secure into place using 2x S60 through top log into post. ***(Detail C3)***
- Repeat for all remaining corners.

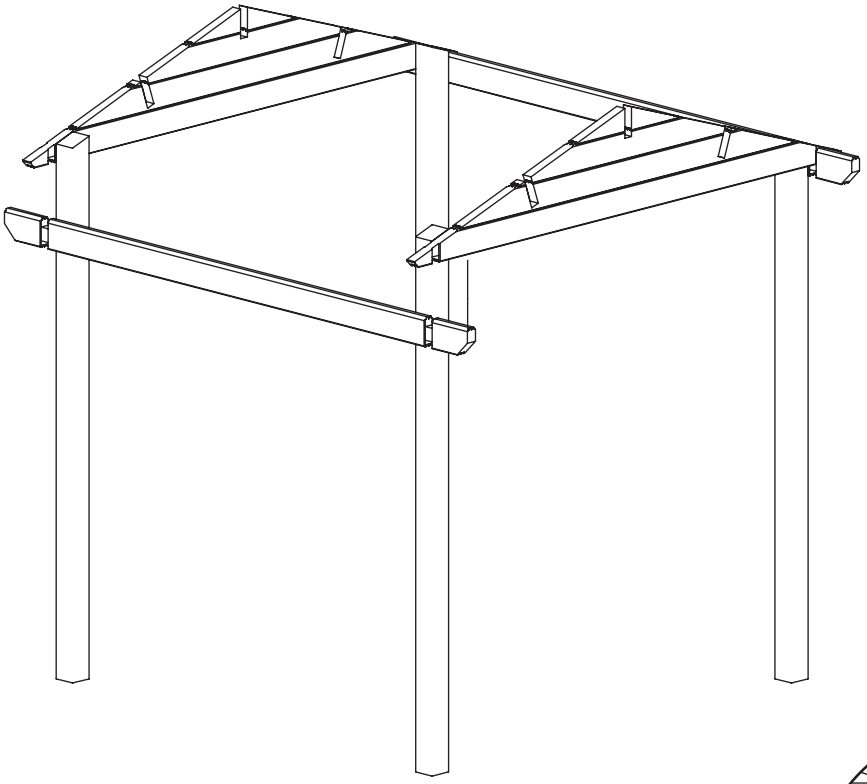

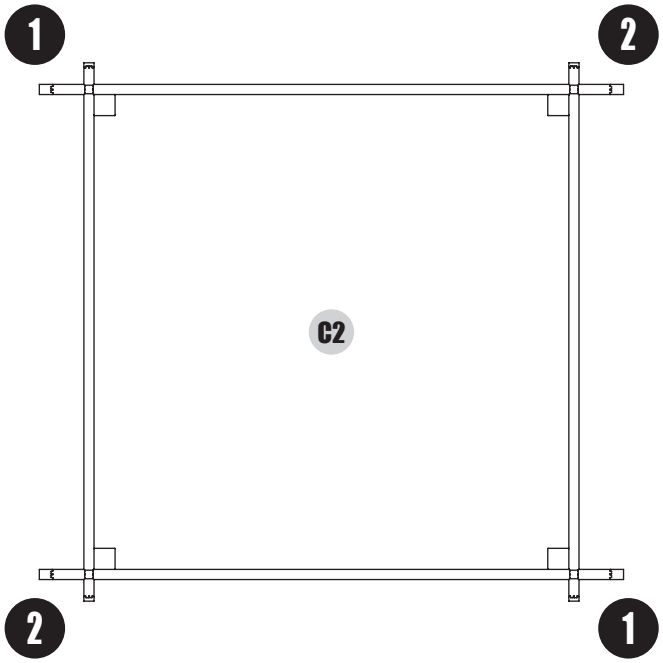

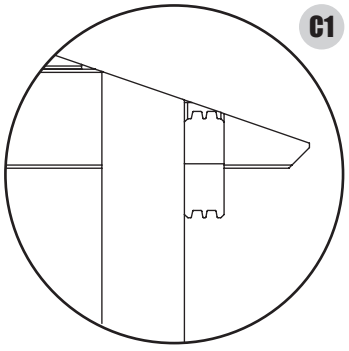

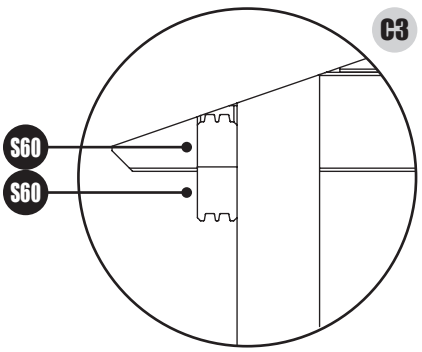

Step 4:

BEGIN BUILDING WALLS

- Using supplied construct diagram as reference, continue to fit logs in place as shown, working down. ***(Detail D)***
- Secure each log in place using 1x S60 through log into upright post.
- Secure base logs using 2x S60 through log into the upright post.

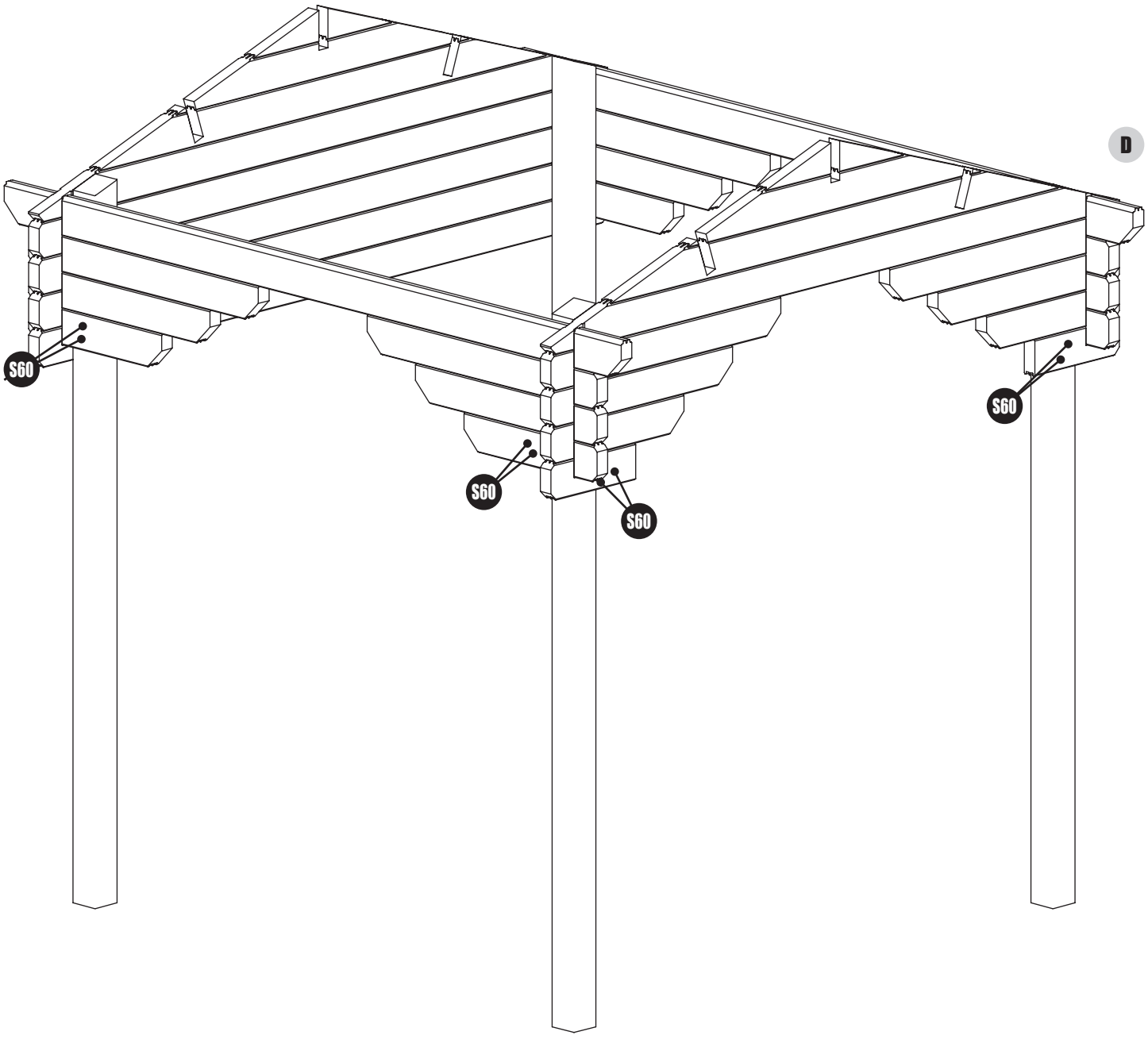

Step 5:

CONTINUE BUILDING BACK WALL

- Continue to fit logs in place as shown on blank gable, working down until reaching log with bottom notches as shown. ***(Detail E)***
- Secure each log in place using 1x S60 through log at each end into upright post.

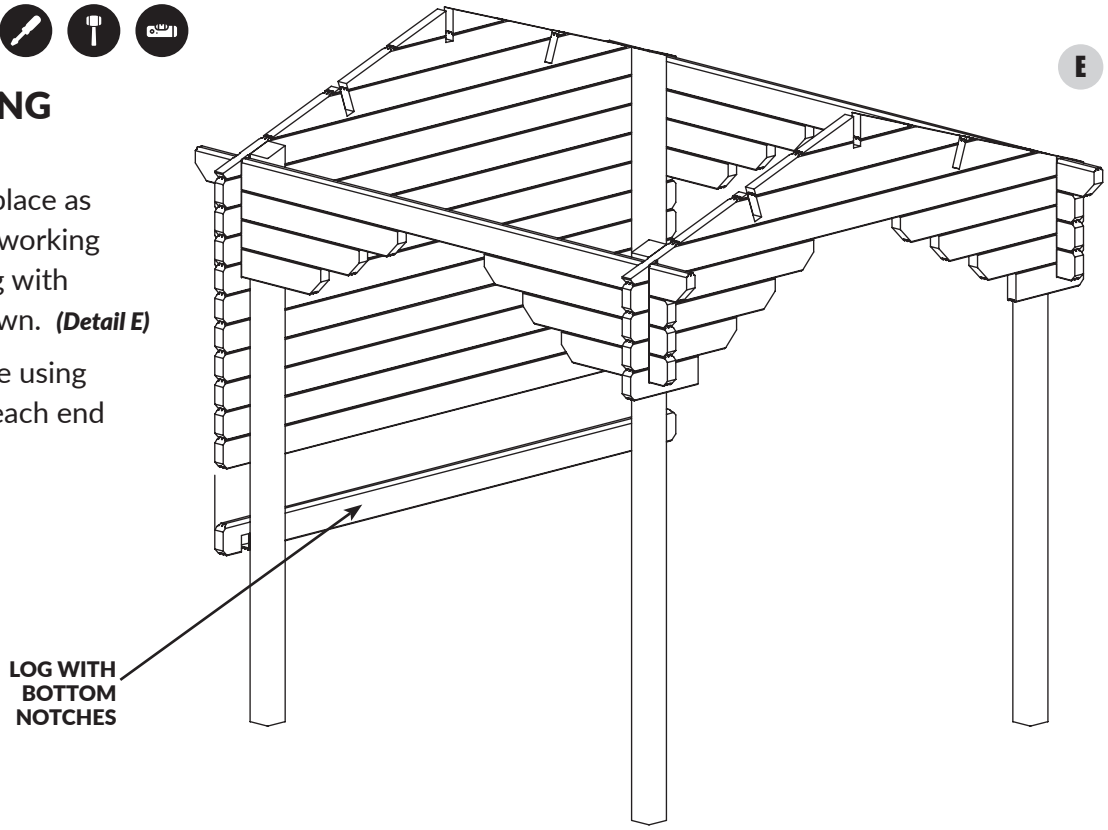

Step 6:

CONTINUE BUILDING SIDE AND BACK WALL

- Continue to fit logs in place as shown on all sides working down until reaching point shown. ***(Detail F)***
- Secure each log in place using 1x S60 through log at each end into upright post.

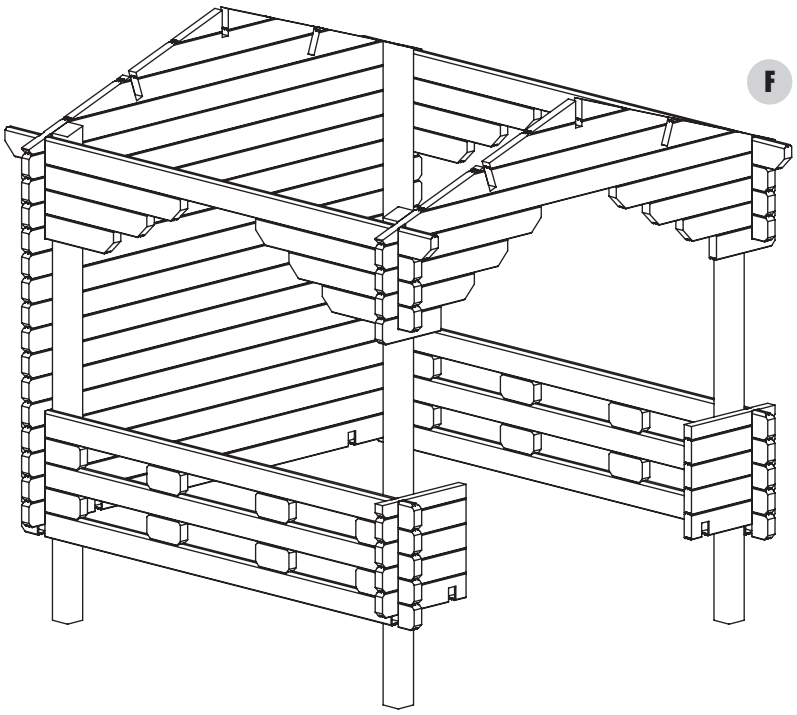

Step 7:

FIT BENCH SUPPORT LOGS

- Fit bench support logs as shown. ***(Detail G1)***
- Secure logs below in place using 2x S60 through log into upright post. ***(Detail G2)***

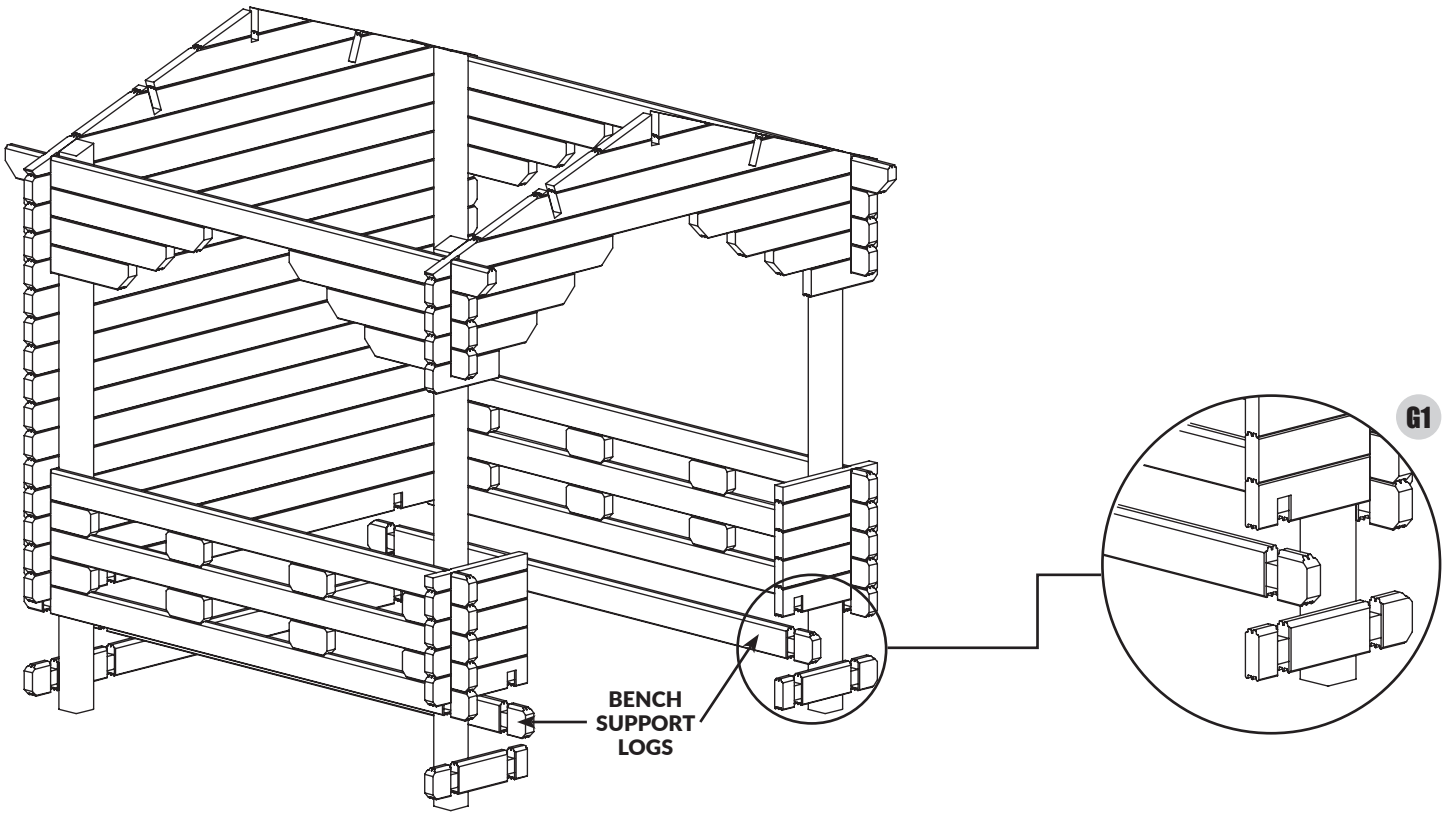

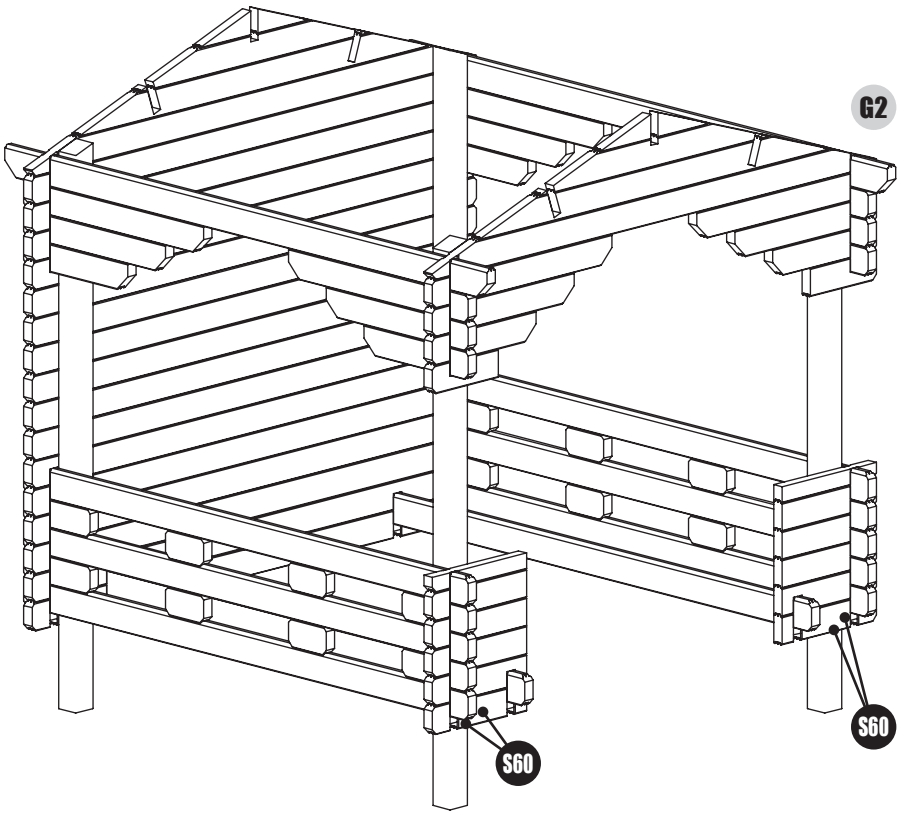

Step 8:

COMPLETE BUILDING WALLS

- Continue to fit logs in place as shown, working down. Secure each log in place using 1x S60 through log into upright post.
- Secure base logs using 2x S60 through log into the upright post. ***(Detail H)***

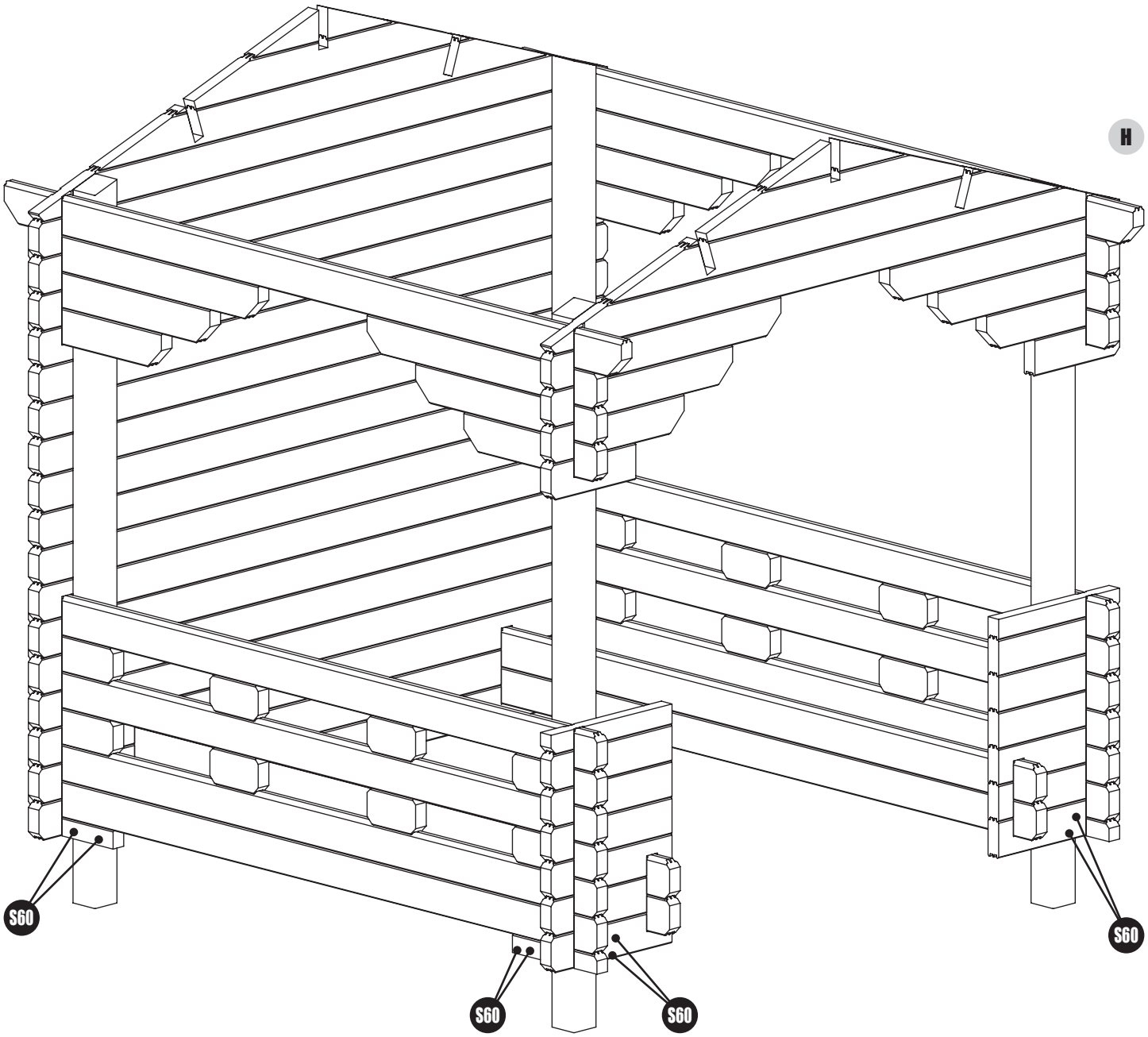

Step 9:

INSTALL BENCH BRACES AND SLATS

- Secure bench braces as shown using 2x S60 per brace per side. ***(Detail I1)***
- Repeat for all remaining bench braces.
- Fit bench slats as shown. Secure using 2x N40 per slat per brace. ***(Detail I2)***
  NOTE: CABIN WALLS HAVE BEEN REMOVED FOR CLARITY.
- Repeat for all remaining bench slats.

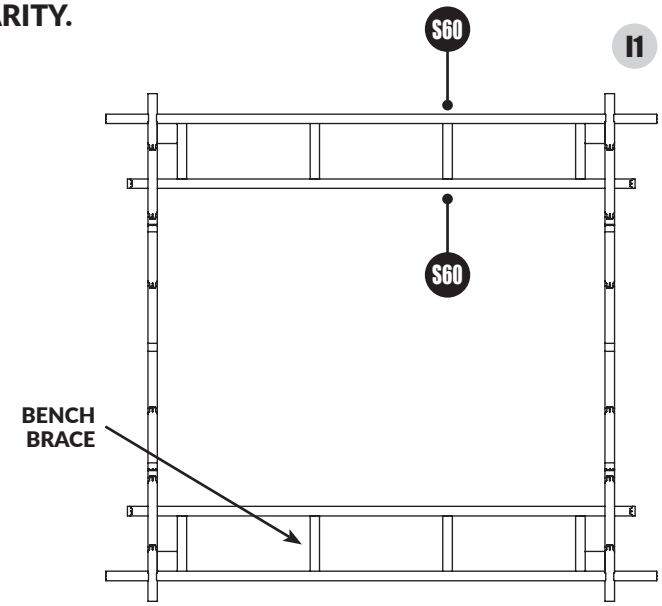

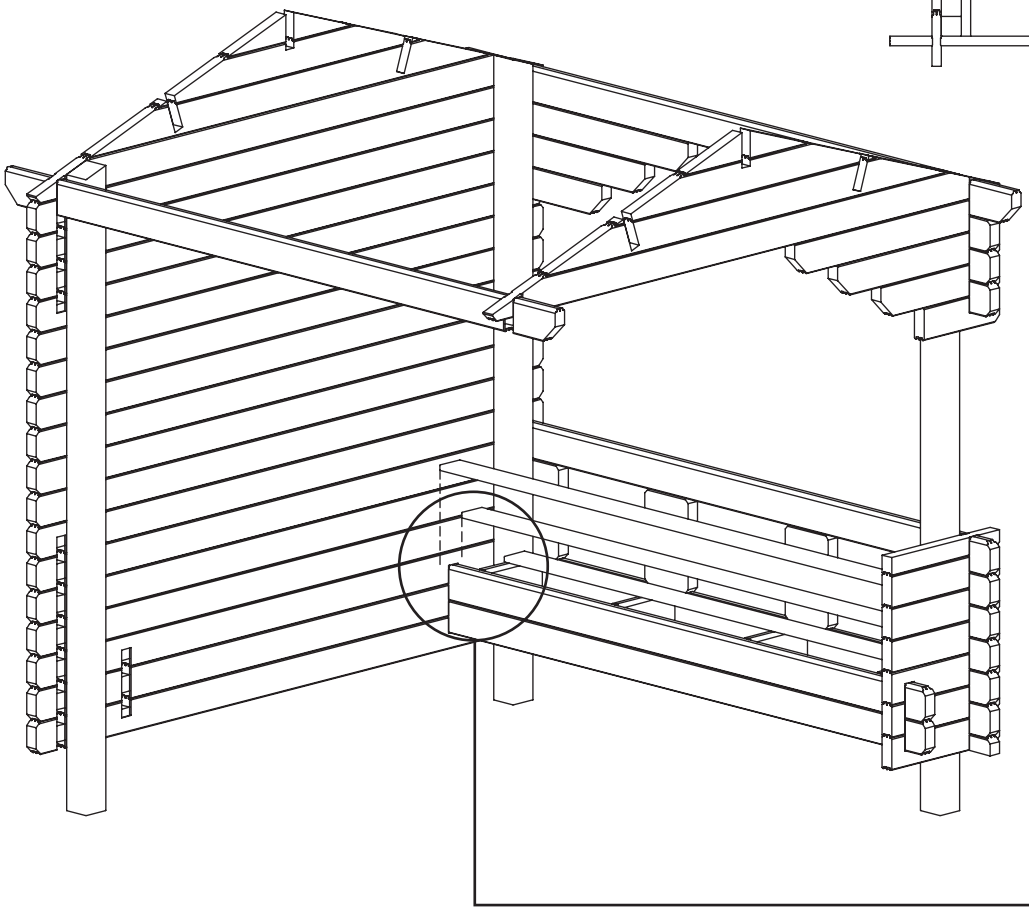

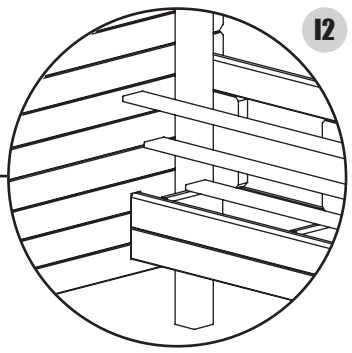

Step 10:

ASSEMBLE SHELF

- Assemble shelf as shown.
- Use 2x N40 through shelf top per shelf support. ***(Detail J1)***
- Use 2x N40 though shelf front per shelf support. ***(Detail J2)***
- Secure to blank gable using 2x S60 per shelf support from outside of shelter. ***(Detail J3)***

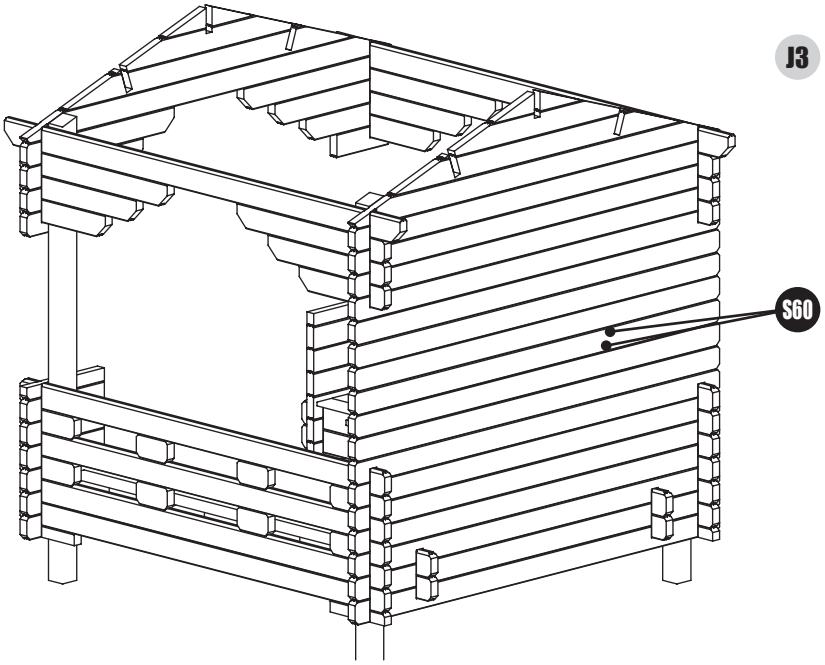

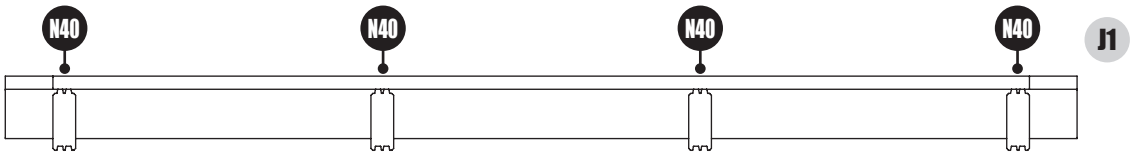

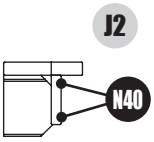

Step 11:

INSTALL PURLINS

- Position the purlins with the angled cuts to the bottom. ***(Detail K1)***
  Ensure notches in purlins line up with gable tops.
- Secure the purlins into the gable tops using 2x N65 per purlin per gable top. ***(Detail K2)***
- Repeat for all purlin and gable top joins.



STANDARD PURLIN

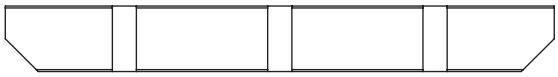

STANDARD PURLIN WITH EXTRA NOTCH(ES)

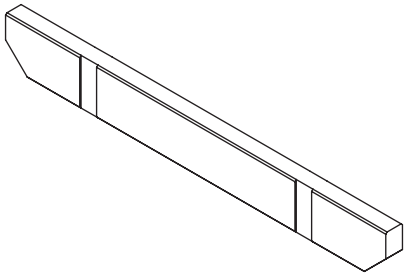

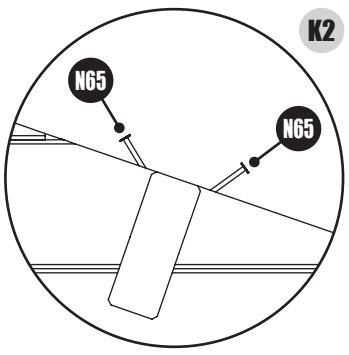

Step 12:

INSTALL ROOF BOARDS

- Before installing the roof boards, check that the cabin is square both vertically & horizontally. Adjust if required.
- Position a tongue & groove roof board flush with purlin at one end of roof.
  - Fix through apex purlin using 2x N65 per board. ***(Detail L1)***
  - Fix through one additional purlin using 2x N65 per board. ***(Detail L2)***
  - Fix through side top logs using 2x N65 per board. ***(Detail L3)***
- Continue working across roof, repeating the steps above.
- The final roof board may need trimming to sit flush with purlin at end.

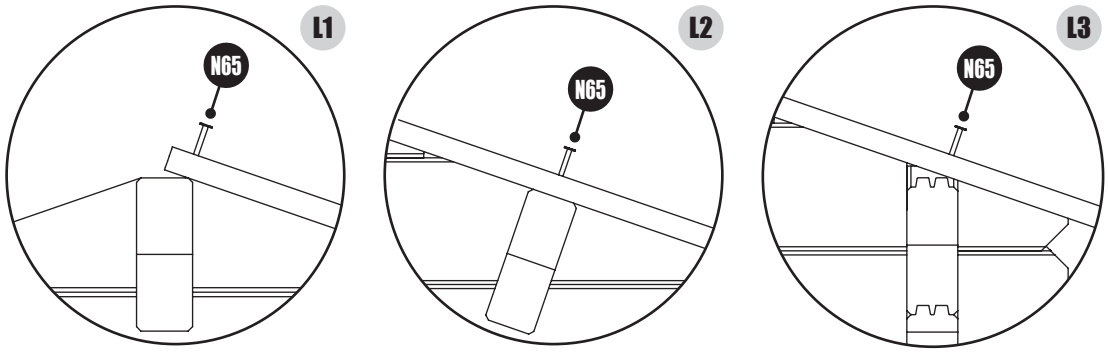

CRITICAL!: ALL ROOF BOARDS MUST HAVE 2X N65 PER FIXING POINT AS OUTLINED ABOVE.

Step 13:

INSTALL ROOF BATTEN AND SKIRTING

- Fix roof batten onto the underside of roof boards on low side using 6x N40, evenly spaced along length. Finish with a piece of skirting, attached using 6x N40, evenly spaced along length. ***(Detail M1 & M2)***

  NOTE: ROOF BATTENS AND SKIRTING MAY COME IN MORE THAN 1 SECTION.

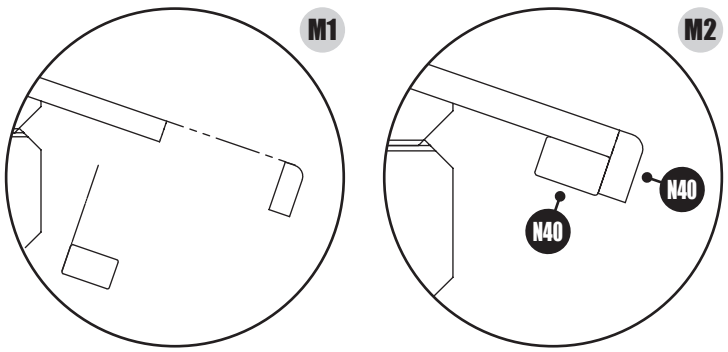

Step 14:

FELT THE ROOF - MEASURE AND CUT BEFORE INSTALLING FELT

- Roll felt out onto a clean flat surface 30 minutes before you need it so it has a chance to flatten out.
- Measure length of roof and allow 75mm overhang at each end. Cut each strip of felt to size.
  Use a straight edge to guide cutting.
- Roll cut felt piece along low side of roof, Section 1, leaving sufficient overhang to fold down onto roof edge.
  Do not fold underneath roof. ***(Detail N1 & N2)***
- Once felt is rolled out, fix to roof using CN20 both ends, making sure felt is straight. Secure through skirting using CN20 at approx. 100mm intervals. ***(Detail N2)***
  Ensure the felt is tight, secure the top side of felt using CN20 at approx. 100mm intervals. ***(Detail N3)***
- Repeat for remaining felt, working from the low side of roof to the high side, overlapping the felt by 75mm until the roof is fully covered. ***(Detail N3)***
- Fold the overhanging felt at ends under roof board and tack in place.

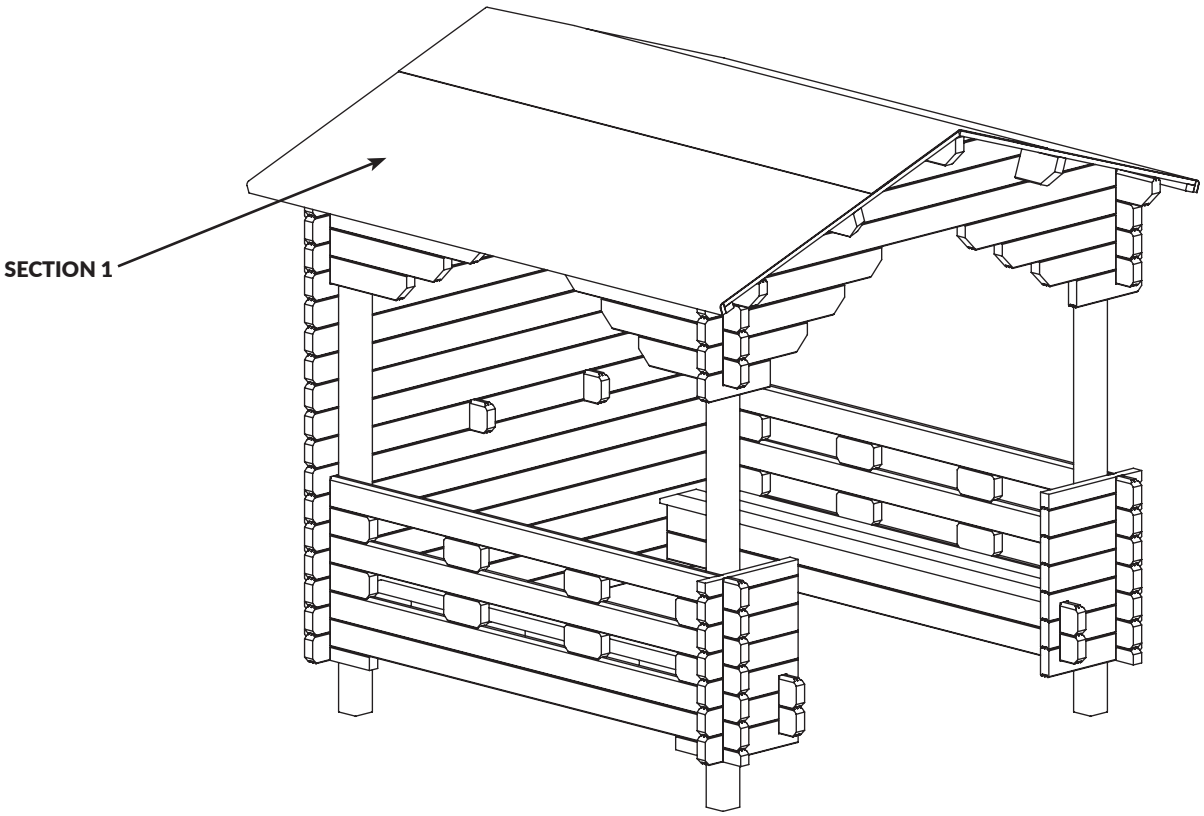

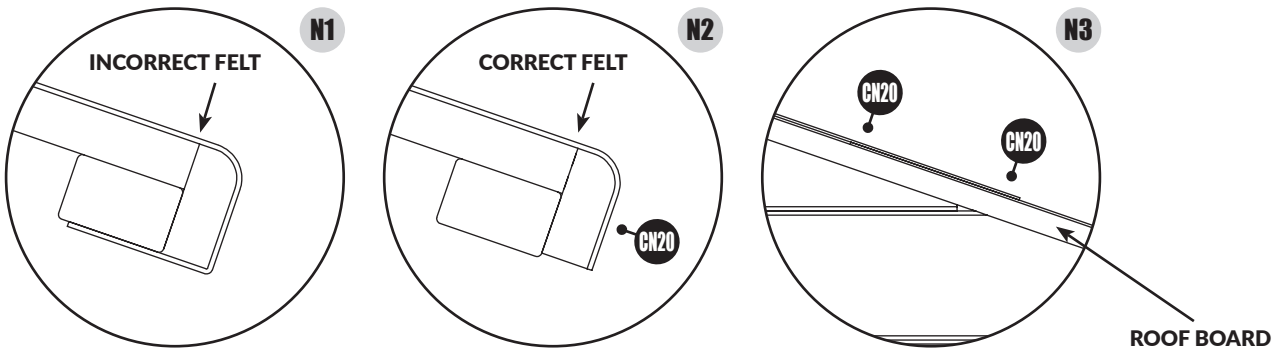

Step 15:

ATTACH ROOF FASCIA BOARDS (BARGEBOARDS) & FINIAL

- Attach roof fascias using 4x N40 per fascia board. Nail through top purlin and bottom roof batten. Complete the look with finials over the join at apex. Secure using 2x N40 per finial.
  NOTE: THERE ARE NO BARGEBOARDS SUPPLIED FOR LOW SIDE OF ROOF AS THIS WILL PREVENT EFFECTIVE WATER DRAINAGE.

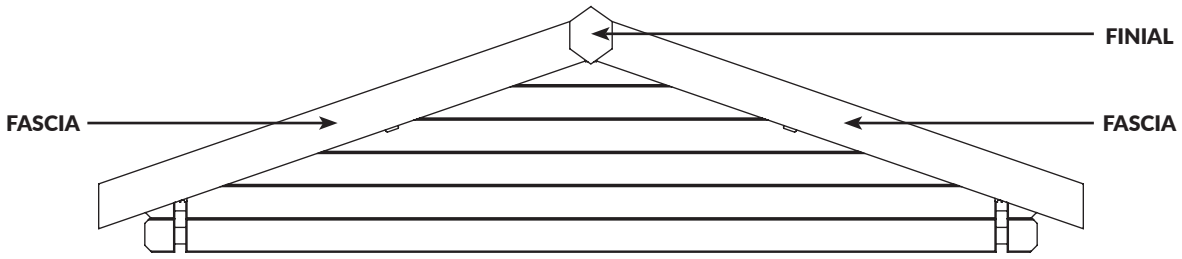

Step 16:

INSTALL INTERNAL ROOF BATTENS

- Fix internal roof battens to the top side logs using 4x S40 evenly spaced along the batten as shown. ***(Detail O)***
- These will seal roof and side walls.

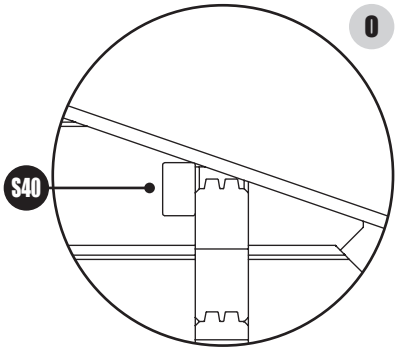

Step 17:

INSTALL INTERNAL ROOF BATTENS

- Fix fascia sleeve to logs using 3x S40 evenly spaced along the board as shown. Repeat for all fascia sleeves.
  NOTE: BACK WALL REMOVED FOR CLARITY IN IMAGE.

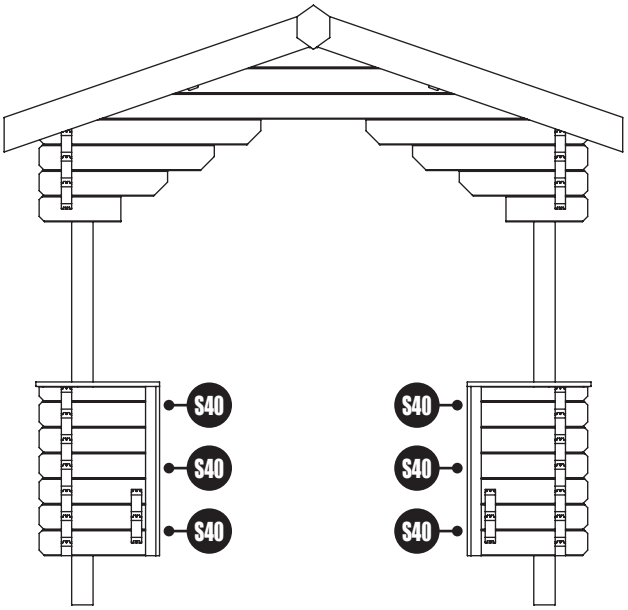

Timber is a natural product; any log or board can expand and contract. This may cause slight gapping in the log cabin which can be rectified by un-screwing and re-screwing fascia boards over the course of the year.

TIG/INS50

01/2026

Head Office

Calverley Lane,
Rodley,
Leeds,
West Yorkshire,
LS13 1NP

Telephone: 0113 205 4189
Website: tigersheds.com
Email: customersupport@tigersheds.com

SCAN CODE!

TO SEE GENERAL ACCESSORY & INSTALLATION VIDEO LIBRARY