TIG/INS41

TIGER LANA LOG CABIN

GENERAL ASSEMBLY INSTRUCTIONS

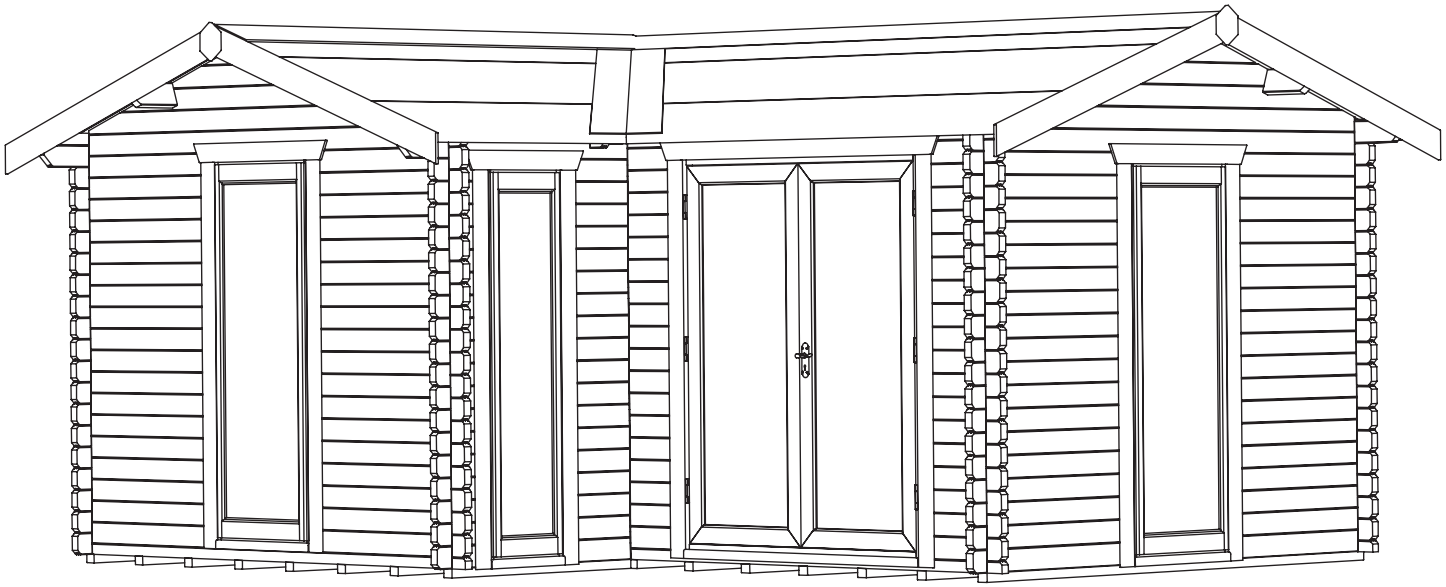

PLEASE READ INSTRUCTIONS CAREFULLY

- Check the pack and make sure you have all the parts listed.
- When you are ready to start, make sure you have the right tools at hand (not supplied).
- Ensure there is plenty of space and a clean dry area for assembly.

TIMBER

As with all natural materials, timber can be affected during various weather conditions. For the duration of heavy or extended periods of rain, swelling of the wood logs may occur. Warping of the wood may also occur during excessive dry spells due to an interior moisture loss. Unfortunately, these processes cannot be avoided but can be mitigated. It is suggested that the outdoor building is sprayed with water during extended periods of warm sunshine and sheltered as much as possible during rain or snow.



Please do not paint or treat your cabin timbers before assembly as they must stay dry for a snug tongue and groove fit. To validate your guarantee and ensure longevity of the product, it is ESSENTIAL that your building is treated with an appropriate high-quality water-resistant preservative AFTER assembly, both internally and externally, then annually thereafter.

BUILDING A BASE

Care must be taken to ensure the product is placed on a suitable base. When thinking about where the building and base is going to be constructed, ensure that there will be access to all sides for maintenance work and annual treatment.

Ensure the base is firm and level and is built on firm ground, to prevent distortion.

The constructed base must be at least the size of tanalised floor bearers as referenced in supplied construct diagram. It is also recommended that the floor be at least 25mm above the surrounding ground level to avoid flooding.

TYPES OF BASE

- Durable plastic grid*.
- Concrete 75mm laid on top of 75mm hard-core.
- Slabs laid on 50mm of sharp sand.
- Timber base - Self constructed/Buy pre-made.



We recommend a Fastfit EcoBase for your building. It is durable, lightweight, flexible, and easy to put in place. Please see tigersheds.com for details.

CAUTION:
All buildings should be erected by two competent adults.



CAUTION:
It is advisable to wear safety gloves during building installation.



Whilst all products manufactured are made to the highest standards of safety, we cannot accept responsibility for your safety whilst erecting or using this product.

FSC
www.fsc.org

The mark of responsible forestry

FSC® C125286

MADE IN THE UK SINCE 1913.
We have been making our high quality, great value garden buildings here in Britain for decades.

GO WITH THE PRO!

We understand how busy life can be. Our Pro-Installation service can take the stress and strain out of assembling your quality Tiger building for you. We recommend using professional and dedicated installers to erect your building. With their knowledge and experience, they will ensure that your cabin is put properly in place ready for you to enjoy your space for years to come.

If you have not booked our Pro-Installation service and would like to arrange an installation, please contact our friendly customer support team on **0113 205 4189** (Mon – Fri 9am-5pm) or email **sales@tigersheds.com**.

- The pro-install team will contact you to arrange a suitable time and date for the fitting.
- Sit back, relax and let our professional home installation service do all the hard work for you!
- Please view the Pro Installation page on tigersheds.com for full terms & conditions and to see if your postcode area is covered by our Pro-Install teams.

BEFORE YOU GET STARTED

TOOLS REQUIRED

We recommend using the following tools (not supplied):





FIXING KIT CONTENTS:

CN20 Clout Nails ***(20mm Galvanised - QTY 300)***

N40 Nails ***(40mm Galvanised - QTY 30)***

N65 Nails ***(65mm Galvanised - QTY 500)***

BG40 Nails ***(40mm Galvanised Annular - QTY 400)***

CB40 M6 Coach Bolts ***(40mm - QTY 8)***

S40 Screws ***(40mm - QTY 60)***

S60 Screws ***(60mm - QTY 8)***

S80 Screws ***(80mm - QTY 16)***

Unpacking supplied cabin.

- Remove all wrapping from delivery. From top to bottom, cut banding holding all components together and remove the cabin components.
  NOTE: PARTS MAY HAVE BECOME LOOSE OR MOVED DURING TRANSPORTATION.
- Lay components on a dry, horizontal surface.

BUILDING PACK CONTENTS:

For full details of what should be included please see the Product Construct Diagram and itemised cutting list that is supplied with the delivery. They are also available on request in pdf form from our helpful Customer Support team – please call **0113 205 4189** or use the Items Delivered Query form at **tigersheds.com/contact**.

ASSEMBLY

- Assembly is straightforward if you follow these step-by-step instructions.
- We recommend getting everything aligned properly before screwing together and that screw holes should be pre-drilled to avoid splitting the timber. (Do not come pre-drilled).

IMPORTANT

- Before assembly, please make sure you have a suitable base ready to erect your building on.
- Your base **MUST** be firm and level to ensure that the building is assembled properly and is square.
- Please carefully remove the packaging and unpack the components in your delivery.
  NOTE: ADDITIONAL TIMBER MAY BE INCLUDED AS PACKING MATERIALS.
- **DO NOT** start your build until you have checked that all the parts of your building are present and in a suitable condition.
- If you are organising a third party to install your building, it is best practice not to schedule this immediately on receipt of your order, to give you time to check your delivery.

Step 1:

UNPACKING CABIN COMPONENTS:

- Unpack all components from your supplied cabin pack(s) and place each individual component in the correct order using the supplied construct diagram and parts list as a guide. Ensure all components are present and in the correct position before beginning assembly.
- Each log interlocks in a staggered pattern.
  NOTE: SOME LOGS FEATURE ADDITIONAL FULL NOTCHES & HALF NOTCHES.
- Before securing, ensure that the logs are fitted properly in their respective tongue and grooves, gently tapping down with a mallet. ***(Detail A1 & A2)***

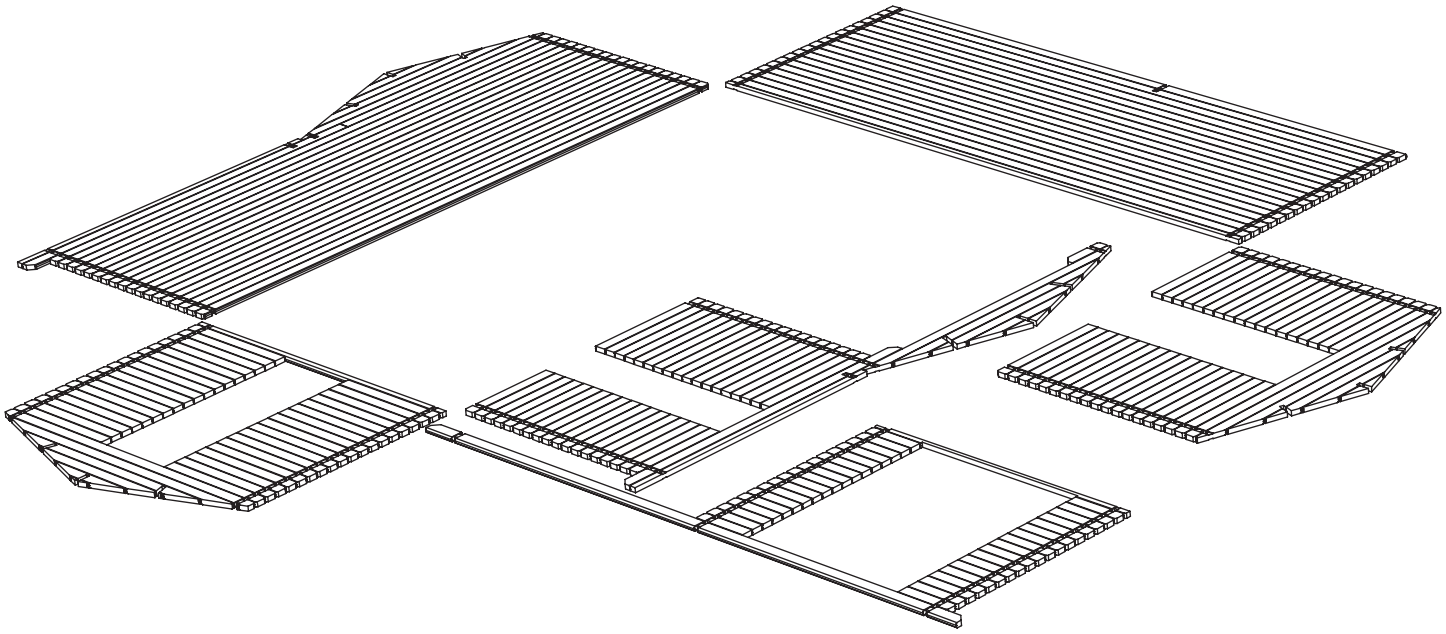

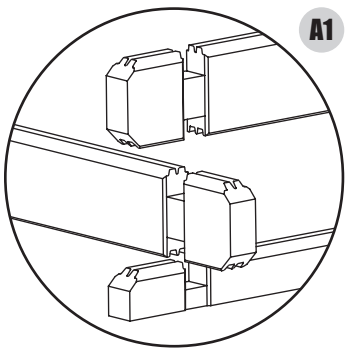

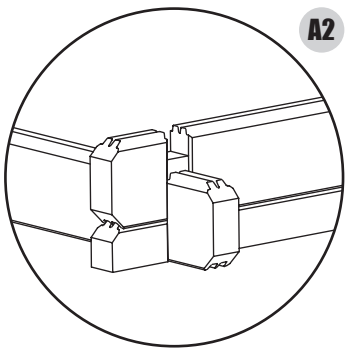

TOP TIP
Use packing materials to protect when tapping logs into place.

Step 2:

DOUBLE DOOR ASSEMBLY

- For cabins with double doors, build up door frame using the four door components provided. Remove supplied key. This is usually stapled over keyhole.
- Arrange the door framing onto a firm and level surface, with hinges to the ground. Slot the door sill (base) then the door head into place. Secure the 4 sections together through the joints using 1x S60 per corner. ***(Detail B)***
  NOTE: HOLES FOR FRAMING ARE PRE-DRILLED IN THE FACTORY.
  NOTE: THIS IMAGE IS FOR ILLUSTRATIVE PURPOSES AND DOOR STYLE MAY DIFFER FROM YOUR SUPPLIED PRODUCT.

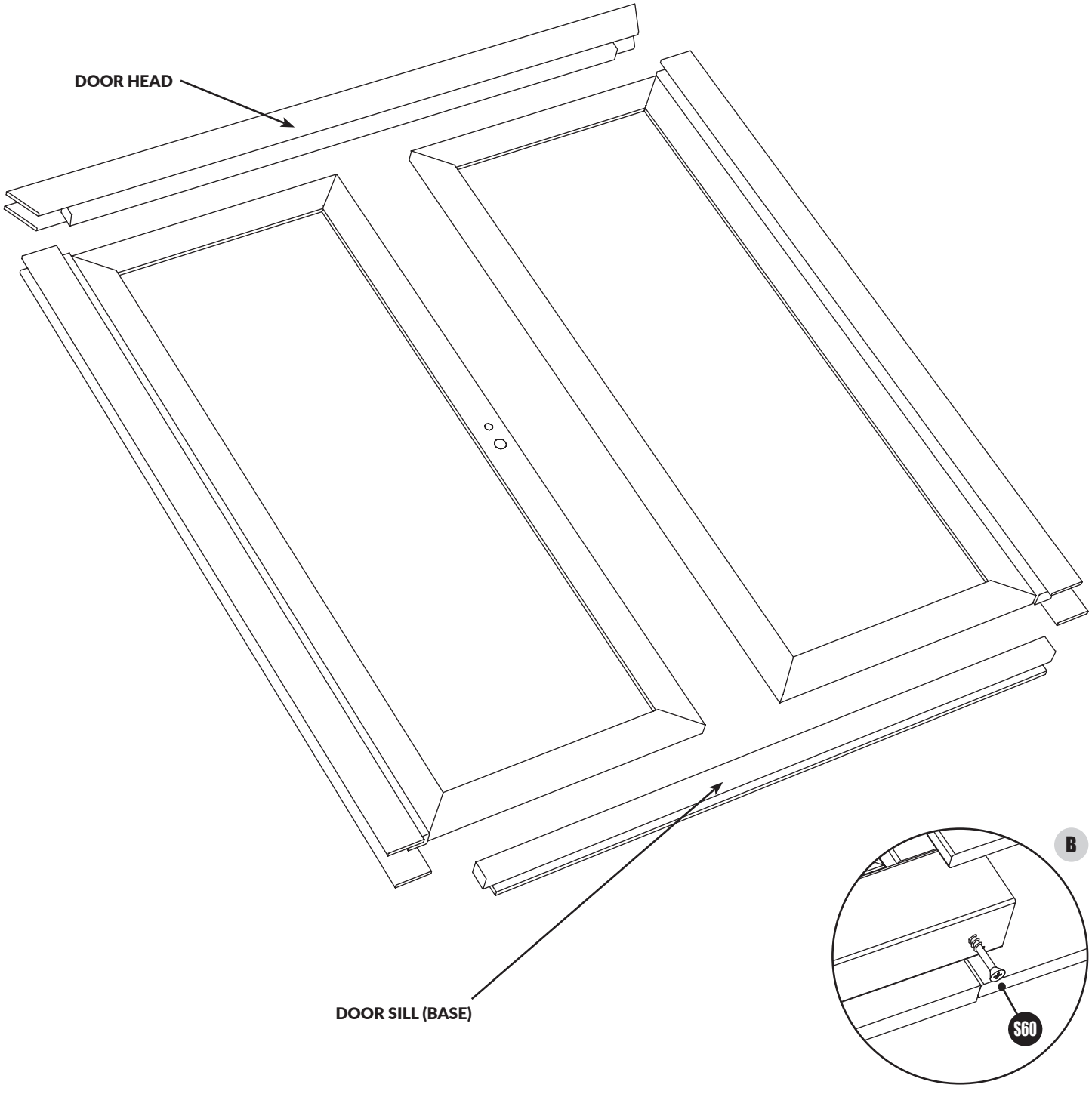

Step 3:

LAY DOWN TANALISED BEARERS

- Refer to the floor plan of your construct diagram, position the tanalised bearers on prepared base.
- Spread out the tanalised bearers equally at approx. 400mm centres. ***(Detail C For Orientation)***
  NOTE: ON LARGER CABINS, TANALISED BEARERS MAY BE SUPPLIED IN MORE THAN 1 PIECE. PLEASE REFER TO YOUR CONSTRUCT DIAGRAM FOR THIS.

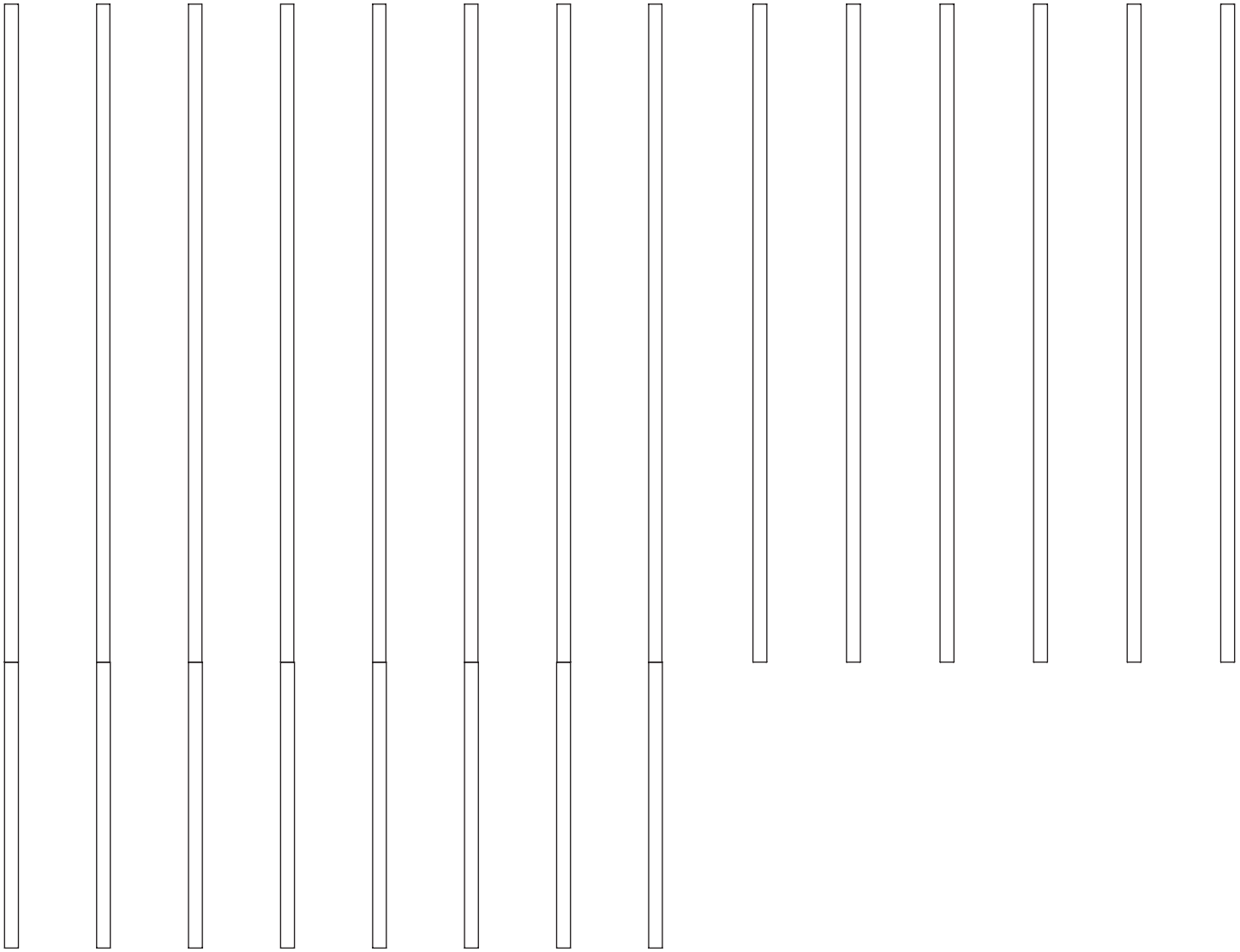

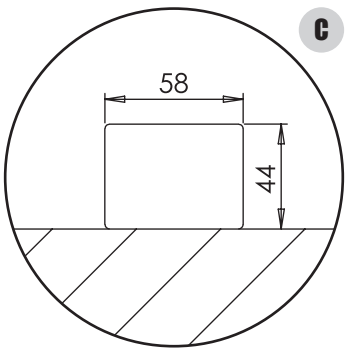

Step 4:

BEGIN BUILDING WALLS

- Place 1st layer of logs on the edges of the bearers. Ensure half logs are put down first. See construct diagram for build order.
- Use floorboard to mark off measuring point as shown.
- Measure to check the floor is square by measuring the points shown. If both measurements are the equal, then your building is square. If not, manually adjust until both measurements are equal.
- Screw logs into tanalised bearers using 3x S80 per log. (1x S80 in centre, 1x S80 per end notch)
- For fixing through notches. ***(Detail D1)***
- For fixing through half log. ***(Detail D2 & D3)***
- Check that floor is level using a spirit level.

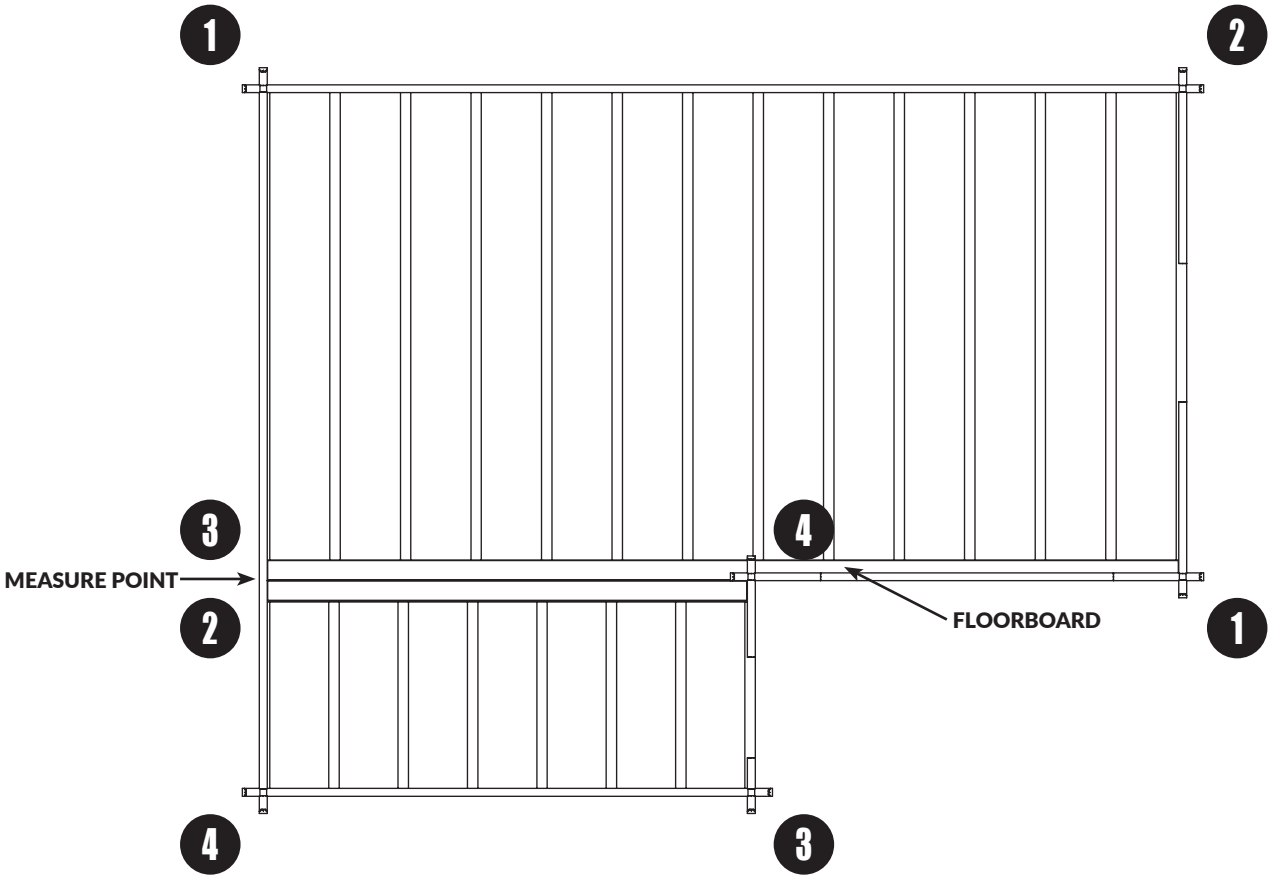

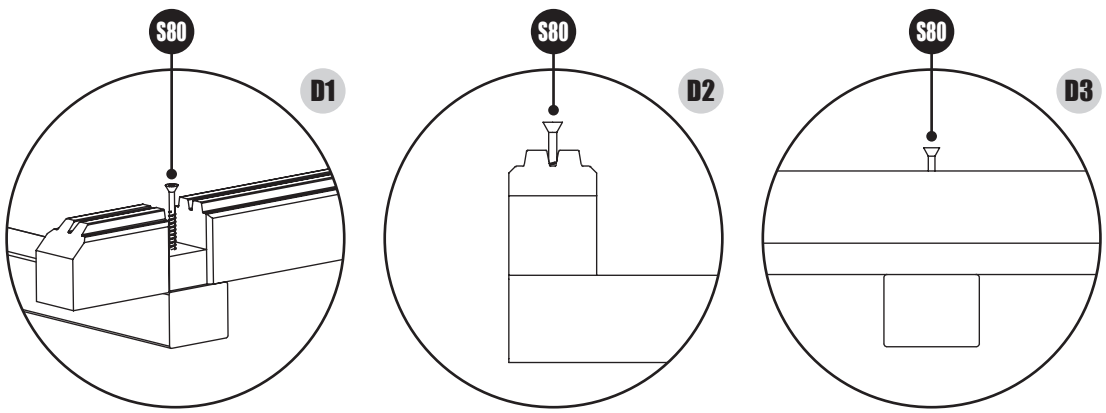

Step 5:

SECURING FLOOR

- Check floorboards are correct size. Do not mix up with roof boards.
- Lay 5 longer & 3 shorter floorboards in position and tack in place. Leave approx. 2.5mm gap between the edge of the floorboards and the inside of external walls. ***(Detail E)***
  NOTE: DO NOT FULLY SECURE AS THESE ARE ONLY TO KEEP THE FLOOR SQUARE WHILE BUILDING THE LOG CABIN.*
- *For cabins with internal partition, the floorboards will need to be fully installed at this stage to allow partition base logs to be installed. Please jump to Step 16 for details.

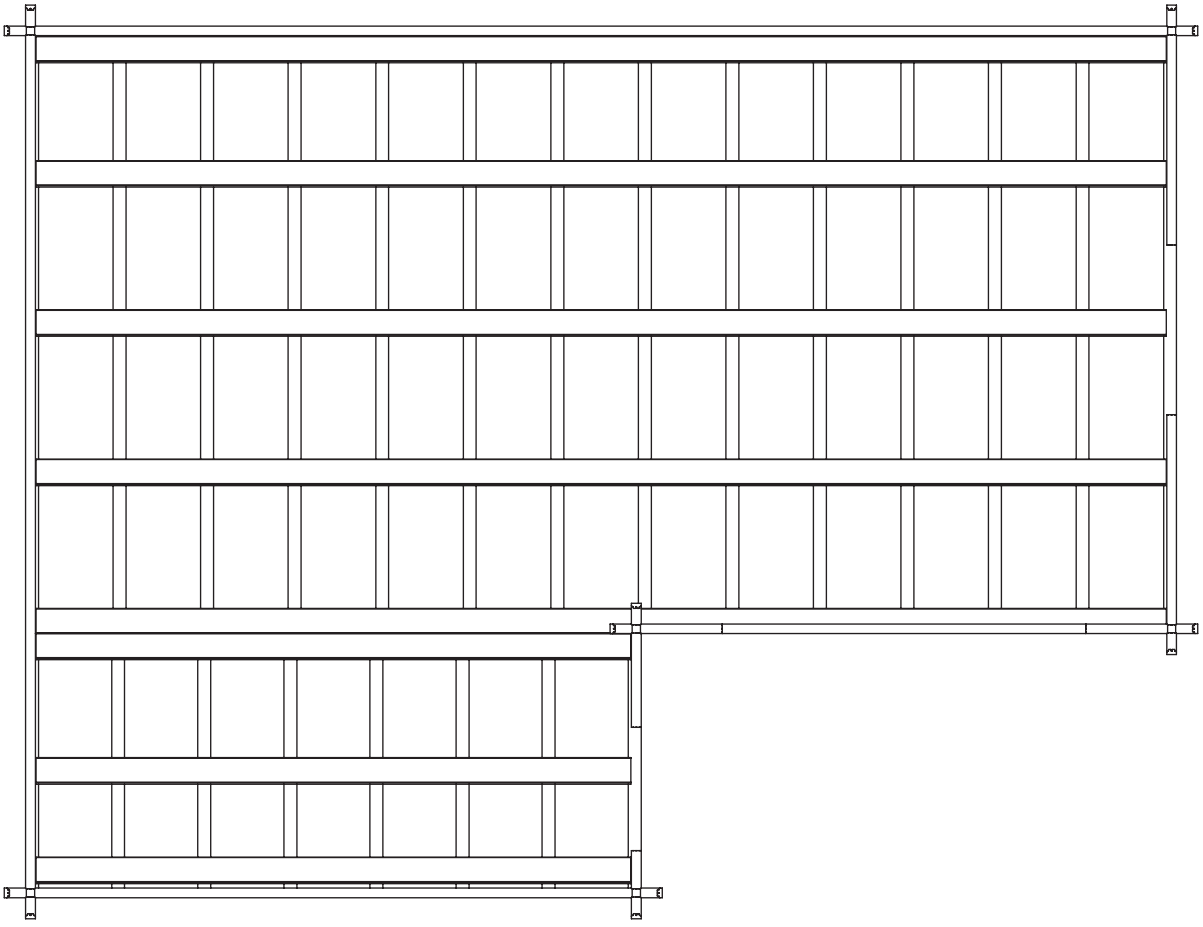

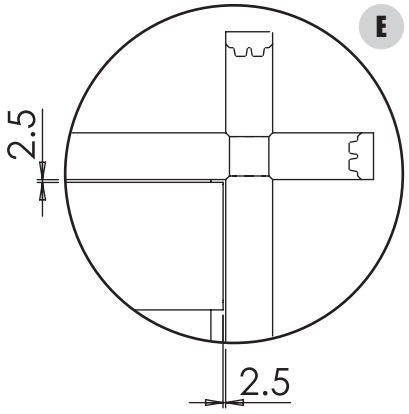

Step 6:

CONTINUE TO BUILD WALLS

- Using construct diagram as a guide, begin to build up the walls by interlocking the logs layer by layer until 3 logs high.
- At this point, store remaining floorboards inside the cabin ready for installation. You may not be able to fit floorboards through the door once cabin has been built.

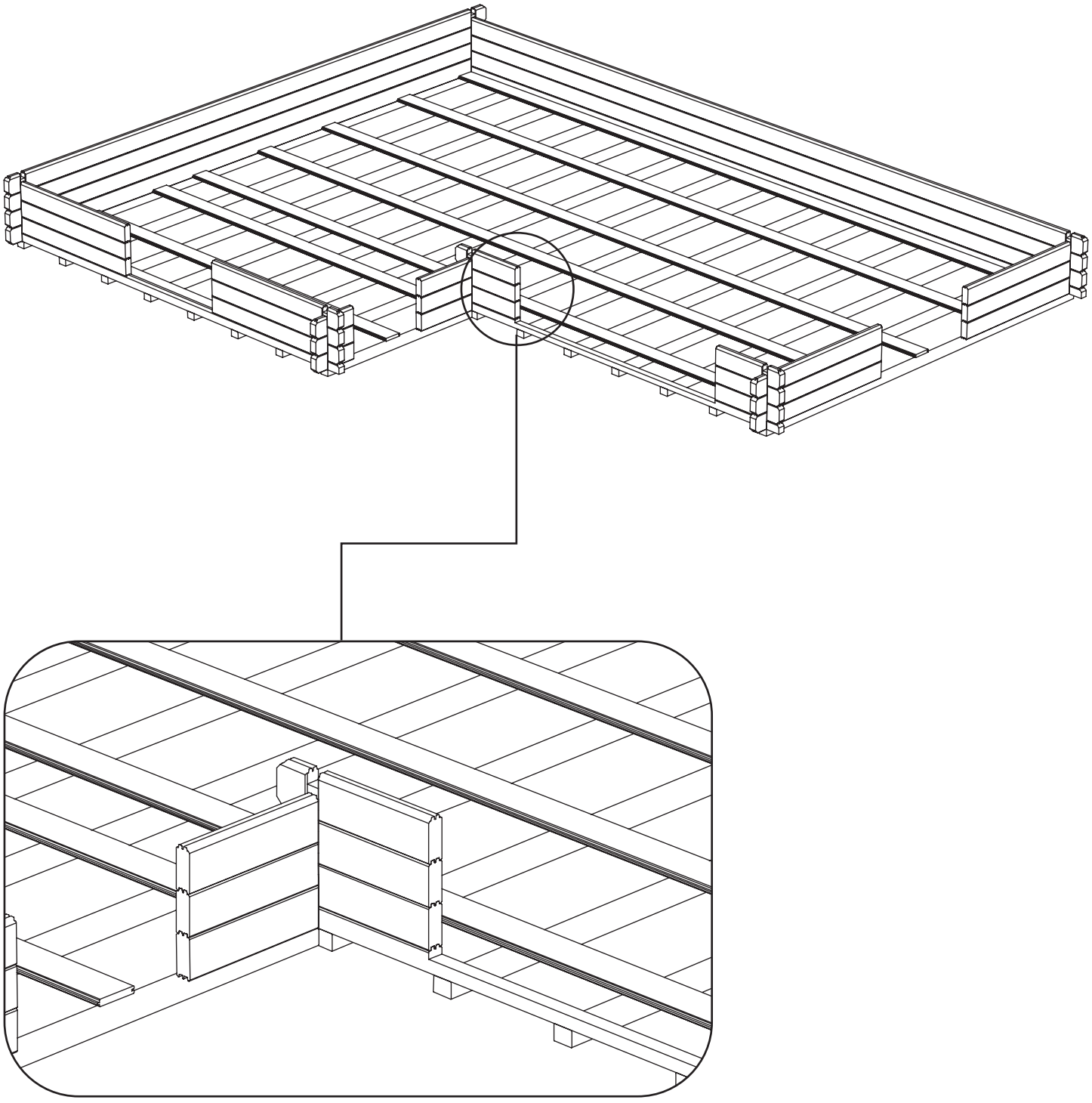

Step 7:

INSTALL DOORS & WINDOWS

- Take the assembled doors and frame and slide over the logs until fully inserted.
- Position centrally within opening. This will leave a gap either side for settling. ***(Detail F1)***
  NOTE: DOORS ARE VERY HEAVY, PLEASE TAKE CARE WHEN LIFTING INTO PLACE.
- Fix supplied door handle to enable access to the cabin. ***(Detail F2)***

F1

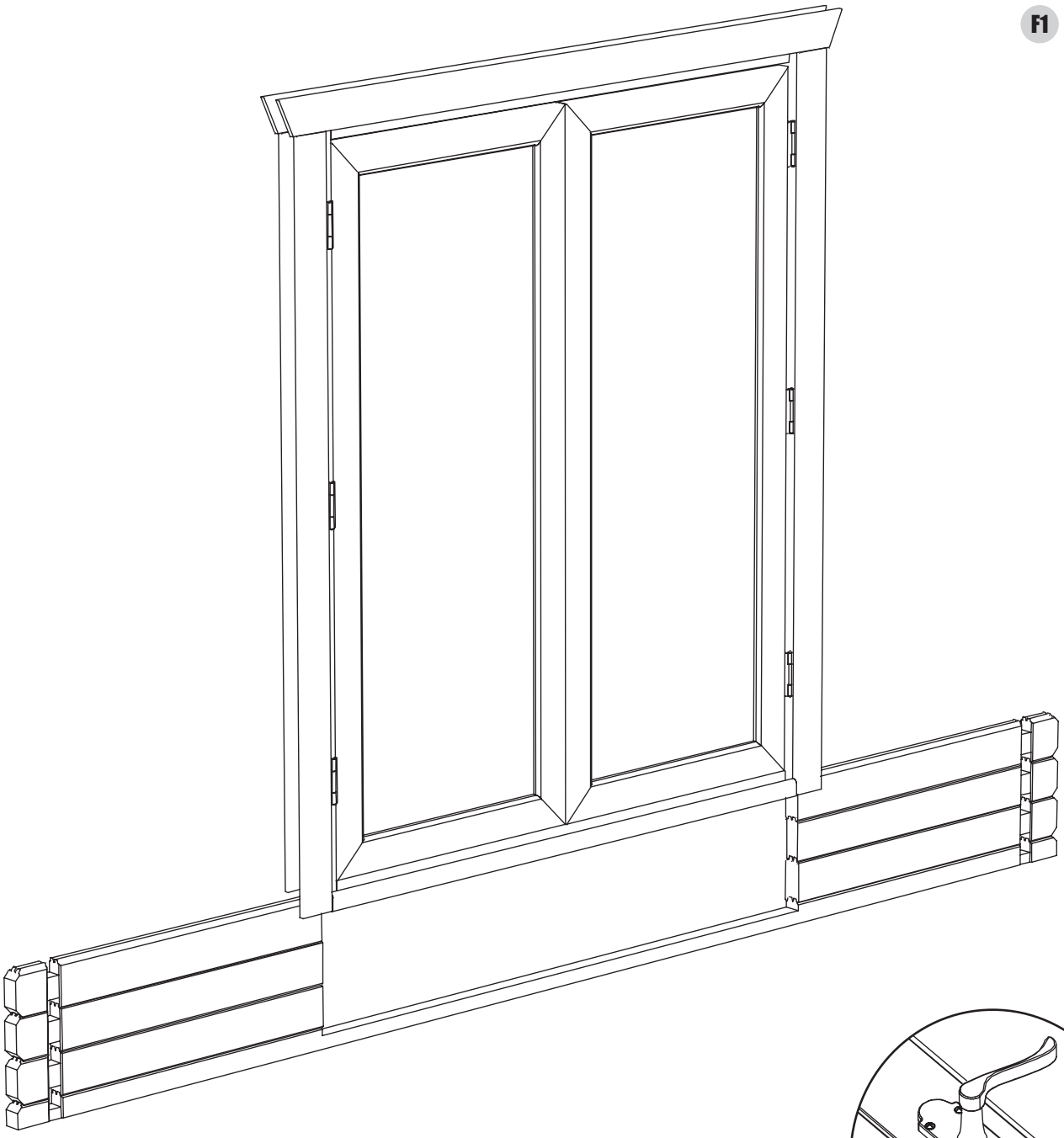

F2

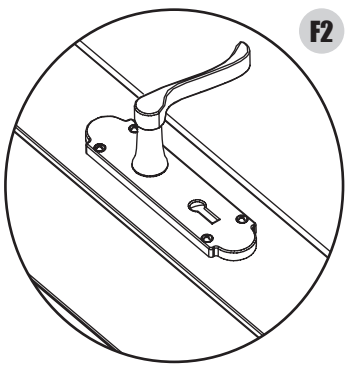

- Repeat process for fitting windows. ***(Detail F3)***
- Position centrally within opening. This will leave a gap either side for settling.
  NOTE: WINDOWS CAN BE VERY HEAVY, PLEASE TAKE CARE WHEN LIFTING INTO PLACE.

  NOTE: IF YOUR BASE IS NOT FIRM AND LEVEL THEN THIS CAN CAUSE THE DOORS AND WINDOWS TO TWIST OR TO GO OUT OF SQUARE. USE A SPIRIT LEVEL TO CHECK.

  NOTE: DO NOT FIX THE DOORS OR WINDOWS IN PLACE AT THIS STAGE
- Continue to build up your cabin to eaves height. ***(Detail F4)***

F3

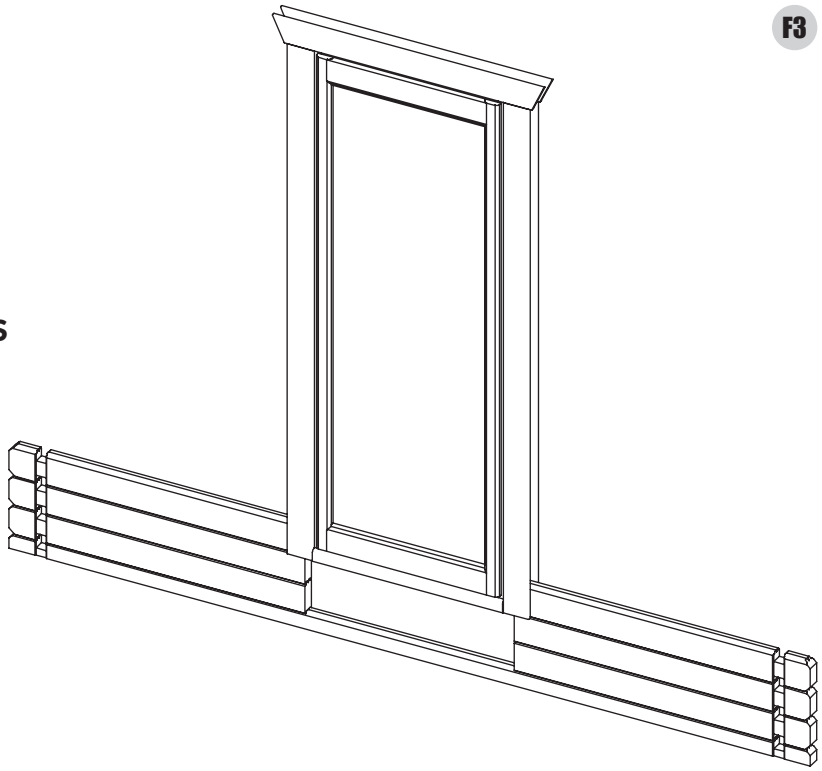

F4

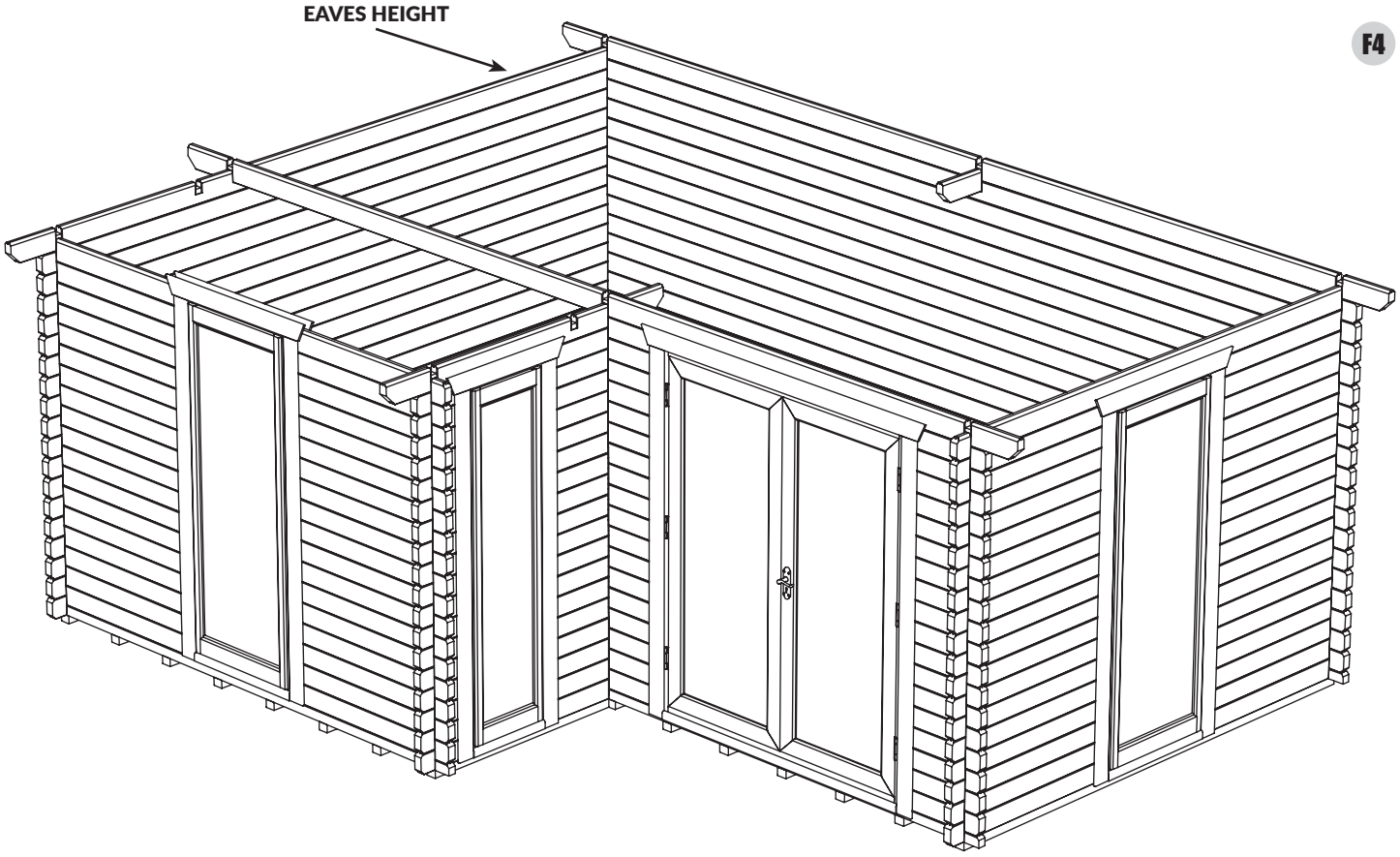

Step 8:

INSTALL GABLE TOPS

- Install standard apex gable tops as shown. Place on top of the eaves height logs.
  NOTE: ON 20ft CABINS, THE CENTRAL STANDARD APEX GABLE TOP WILL HAVE DEEPER NOTCHES TO ALLOW FOR PURLIN JOINERS TO BE INSTALLED. PLEASE REFER TO YOUR CONSTRUCT DIAGRAM BEFORE INSTALLING.
- Install Lana gable tops as shown. Place on top of the eaves height logs.
  NOTE: LANA GABLE TOPS ARE TALLER THAN STANDARD APEX GABLE TOPS. PLEASE REFER TO YOUR CONSTRUCT DIAGRAM BEFORE INSTALLING.
- Fit Grooved Half Logs (GHL) in place as shown.

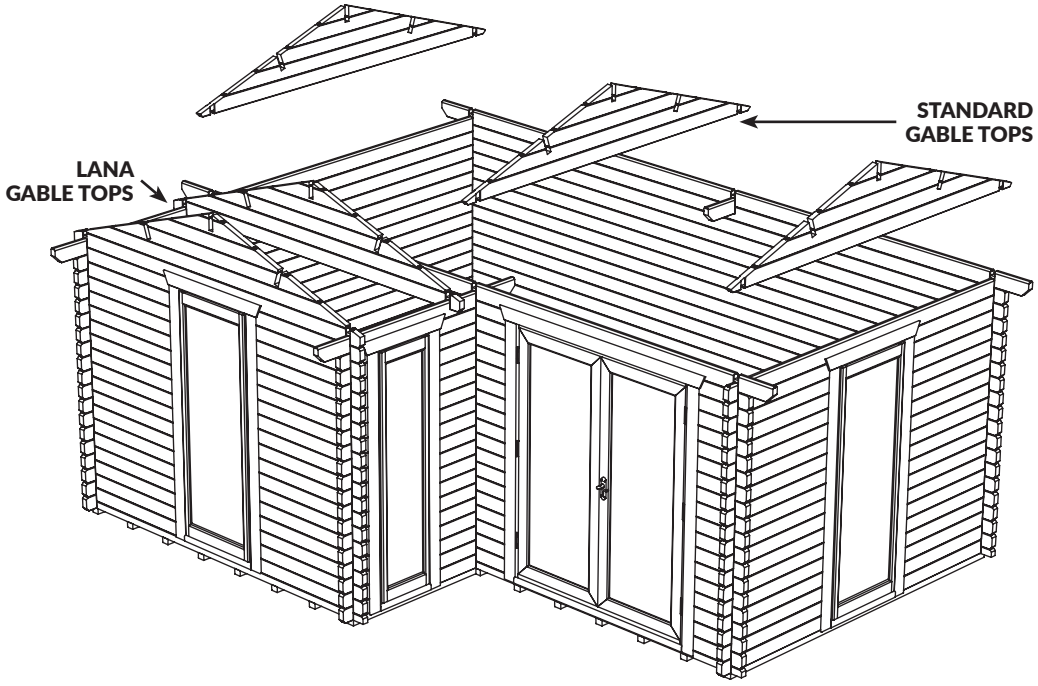

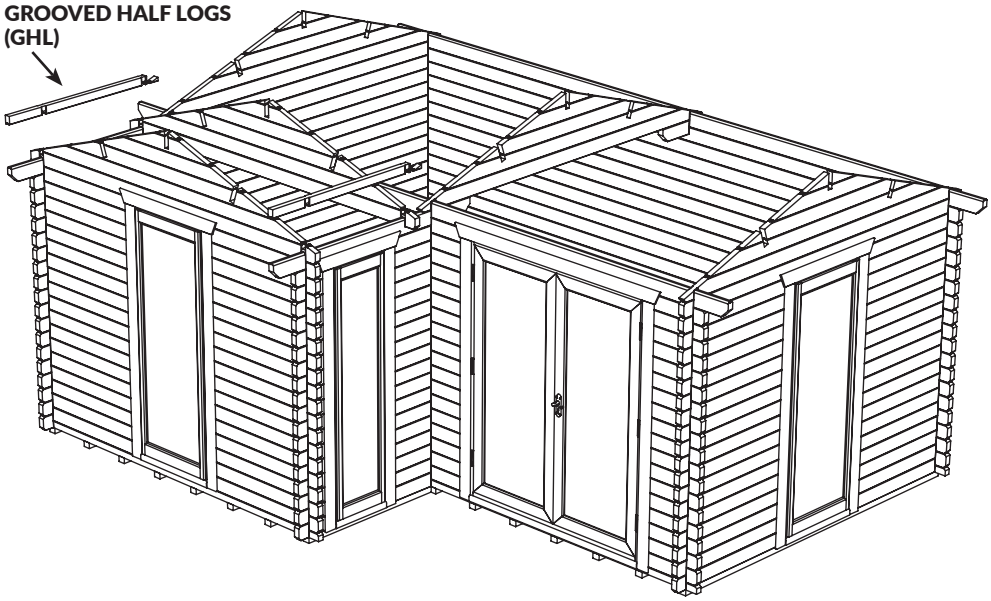

Step 9:

INSTALL PURLINS

- Position the purlins with the angled cuts to the bottom. ***(Detail G1)***. Ensure notches in purlins line up with standard apex gable tops.

  NOTE: PURLINS ON 20ft CABINS ARE IN 2 PIECES AND BUTT TOGETHER OVER PURLIN JOINERS. PLEASE SEE CONSTRUCT DIAGRAM FOR REFERENCE.

- Position the purlins with the angled cuts to the bottom. ***(Detail G1)***. Ensure notches in purlins line up with notches in Lana gable tops.

  NOTE: DO NOT FIT LANA APEX PURLIN UNTIL STANDARD SECTION OF ROOF HAS BEEN FELTED.

- Secure the purlins into the gable tops using 2x N65 per purlin per gable top. ***(Detail G2)***
- Secure through purlin joiners into purlins using 4x S60 per purlin joiner. ***(Detail G3)***
- Repeat for all purlin and gable top joins.

G1



STANDARD PURLIN

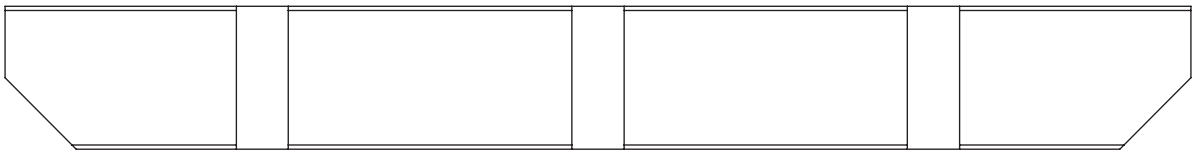

STANDARD PURLIN WITH EXTRA NOTCH(ES)

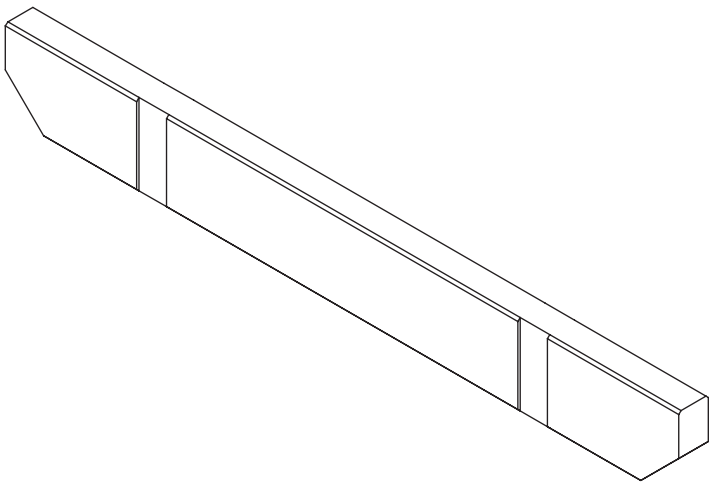

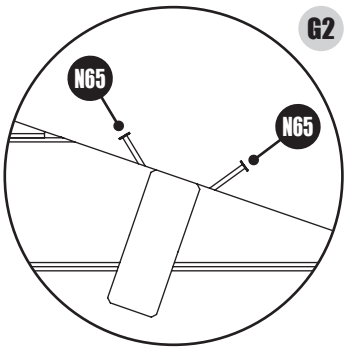

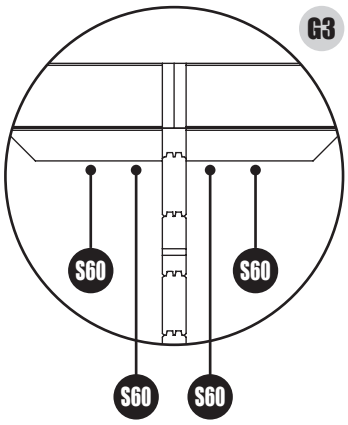

Step 10:

INSTALL ROOF BOARDS

- Before installing the roof boards, check that the cabin is square both vertically & horizontally. Adjust if required.
- Install roof boards on standard apex gable top section of roof. ***(Detail H1)***
- Position a tongue & groove roof board flush with purlin at one end of roof.
  - Fix through apex purlin using 2x N65 per board. ***(Detail H2)***
  - Fix through one additional purlin using 2x N65 per board. ***(Detail H3)***
  - Fix through side top logs using 2x N65 per board. ***(Detail H4)***
- Continue working across roof, repeating the steps above.
- The final roof board may need trimming to sit flush with purlin at end.
- Repeat process for other side of roof. ***(Detail H5)***

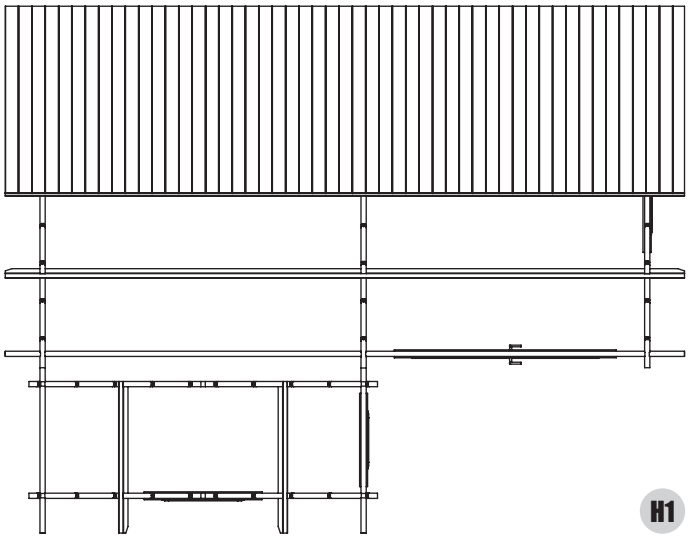

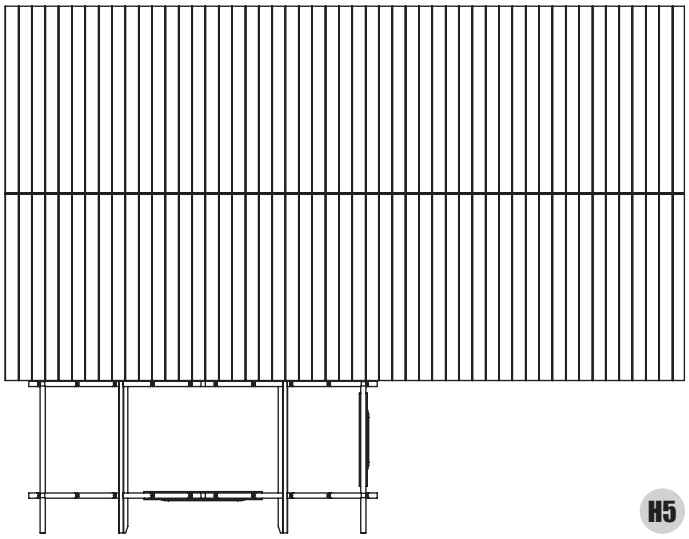

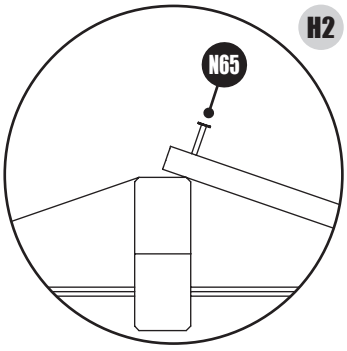

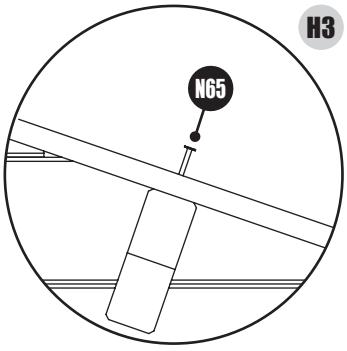

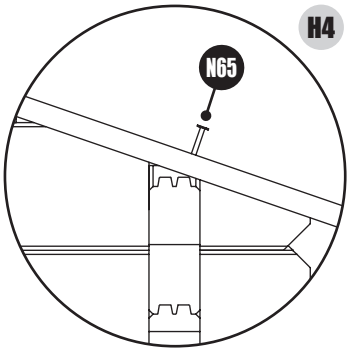

CRITICAL!: ALL ROOF BOARDS MUST HAVE 2X N65 PER FIXING POINT AS OUTLINED ABOVE.

Step 11:

INSTALL ROOF BATTEN AND SKIRTING

- Fix roof batten onto the underside of roof boards on low side using 6x N40, evenly spaced along length. Finish with a piece of skirting, attached using 6x N40, evenly spaced along length. ***(Detail I1 & I2)***

  NOTE: ROOF BATTENS AND SKIRTING MAY COME IN MORE THAN 1 SECTION.

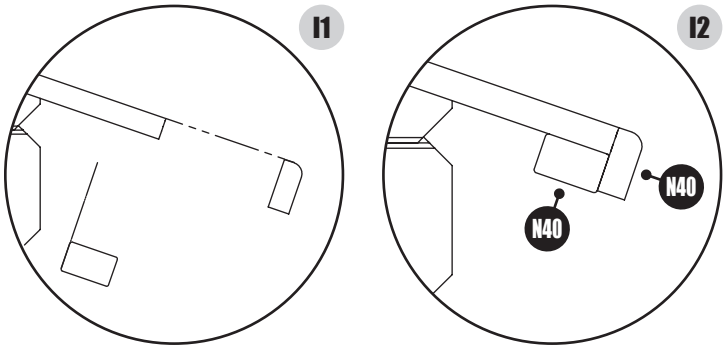

Step 12:

FELT THE ROOF - MEASURE AND CUT BEFORE INSTALLING FELT

- Roll felt out onto a clean flat surface 30 minutes before you need it so it has a chance to flatten out.
- Measure length of roof and allow 75mm overhang at each end. Cut each strip of felt to size. Use a straight edge to guide cutting.
- Roll cut felt piece along low side of roof, Section 1, leaving sufficient overhang to fold down onto roof edge.
  Do not fold underneath roof. ***(Detail J1 & J2)***

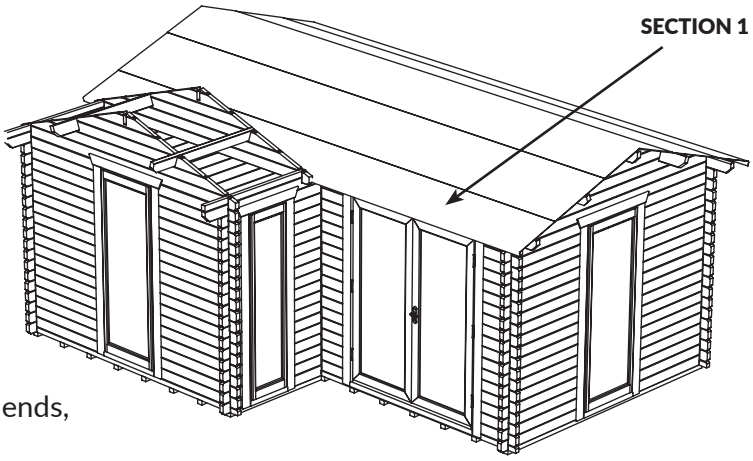

- Once felt is rolled out, fix to roof using CN20 both ends, making sure felt is straight. Secure through skirting using CN20 at approx. 100mm intervals. ***(Detail J2)***
  Ensure the felt is tight, secure the top side of felt using CN20 at approx. 100mm intervals. ***(Detail J3)***
- Repeat for remaining felt, working from the low side of roof to the high side, overlapping the felt by 75mm until the roof is fully covered. ***(Detail J3)***
- Fold the overhanging felt at ends under roof board and tack in place.

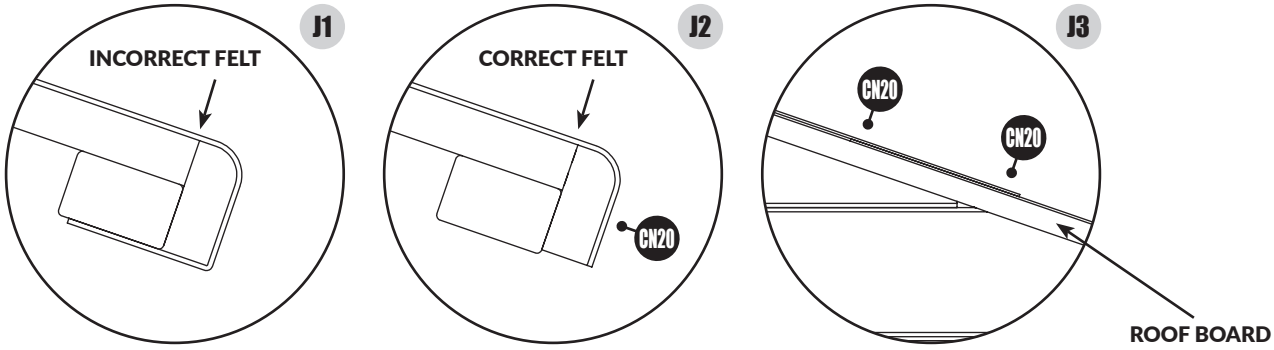

Step 13:

INSTALL ROOF PANELS & BOARDS

- Fit Lana apex purlin. Secure using method in step 9.
- Install roof panels as shown. Butt against Lana gable top. Fix through gable top into roof panel framing using 2x S60 per panel. ***(Detail K1 & K2)***
  - Fix through apex purlin using 2x N65 per roof panel. ***(See Step 10 - H2)***
  - Fix through roof panel into purlin using 1x N65 per roof panel.
- Use groove on roof panel to attach roof board to start boarding the remaining roof.
  - Fix through apex purlin using 2x N65 per board. ***(See Step 10 - H2)***
  - Fix through one additional purlin using 2x N65 per board. ***(See Step 10 - H3)***
  - Fix through side top logs using 2x N65 per board. ***(See Step 10 - H4)***
- Continue working across roof, repeating the steps above.
- The final roof board may need trimming to sit flush with purlin at end.
- Repeat step 11 to attach roof battens and skirting.

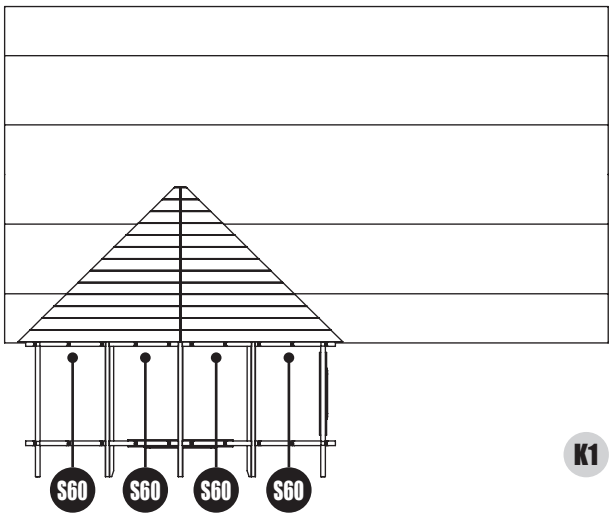

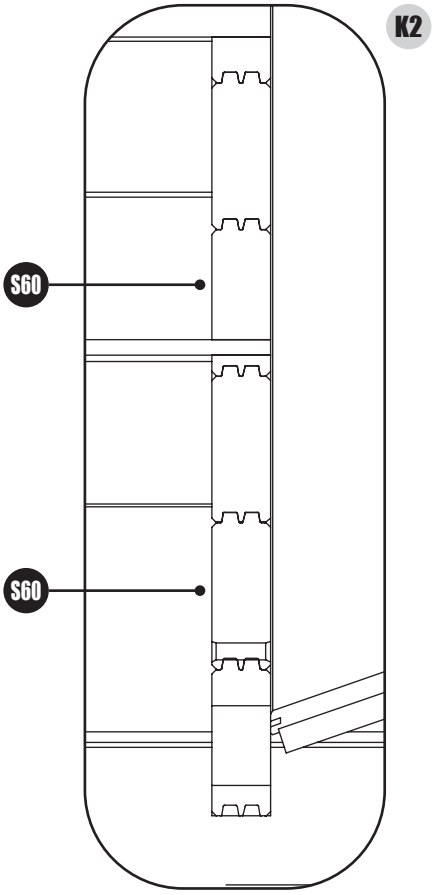

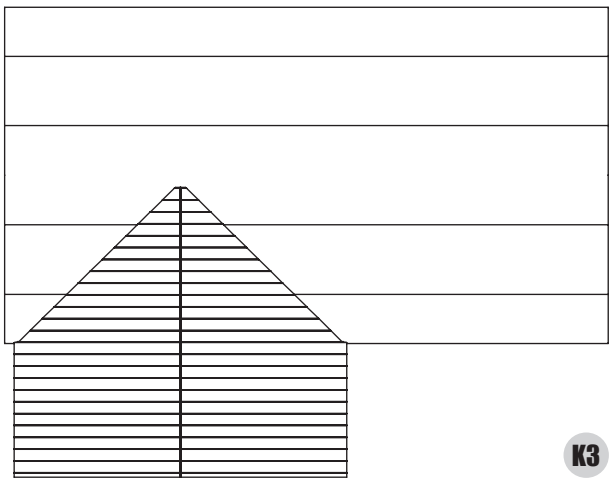

CRITICAL!: ALL ROOF BOARDS MUST HAVE 2X N65 PER FIXING POINT AS OUTLINED ABOVE.

Step 14:

FELT THE ROOF - MEASURE AND CUT BEFORE INSTALLING FELT

- Roll felt out onto a clean flat surface 30 minutes before you need it so it has a chance to flatten out.
- Measure length of roof and allow 75mm overhang at each end. Cut each strip of felt to size. Use a straight edge to guide cutting. ***(Detail L1)***
- Repeat Step 11 to felt roof.
- Measure and cut 0.5m wide piece of felt into 2x 2300mm lengths and fit into corner joins between felts. Secure using 5x CN20 along each edge. These may need trimming at the apex of cabin and at lower edges. ***(Detail L2)***
- Measure and cut 0.5m side piece of felt to match the length of roof on Lana section at apex. Secure over apex and cover joins using CN20 at approx. 100mm intervals. ***(Detail L3)***
- Measure and cut 0.5m side piece of felt to match the length of roof on Standard section at apex. Secure over apex and cover joins using CN20 at approx. 100mm intervals. ***(Detail L4)***

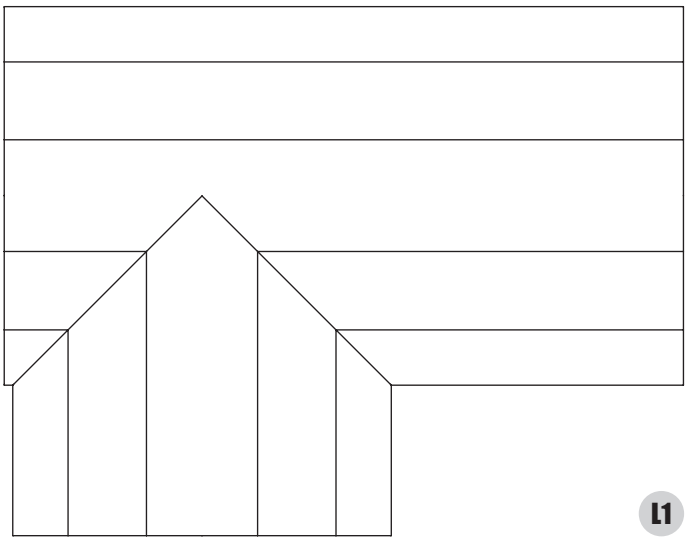

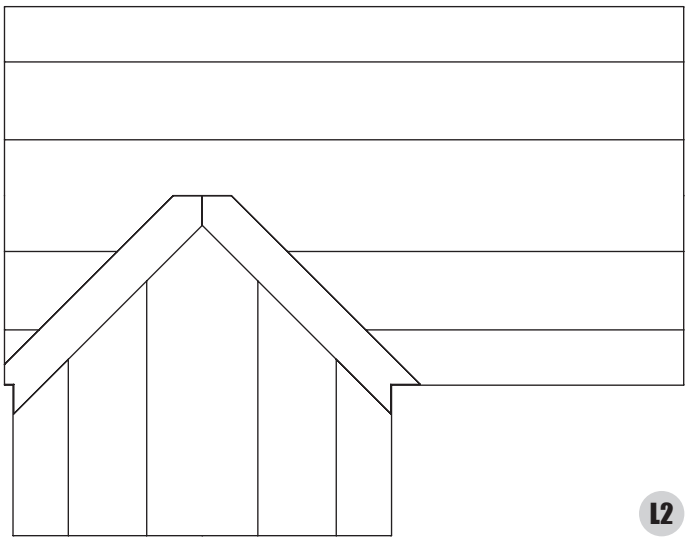

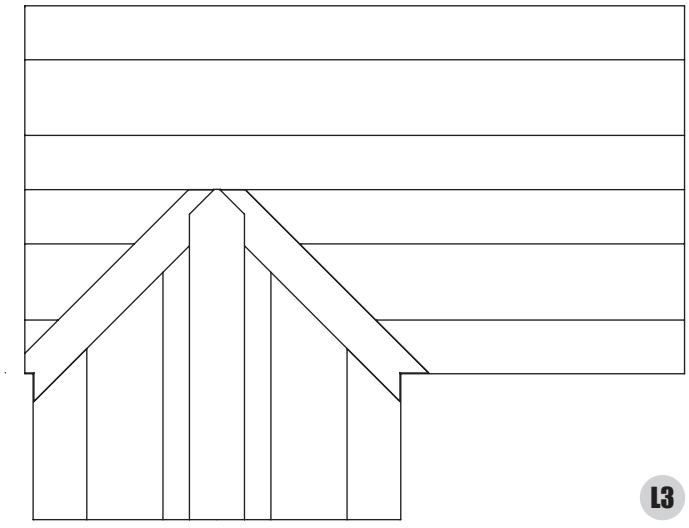

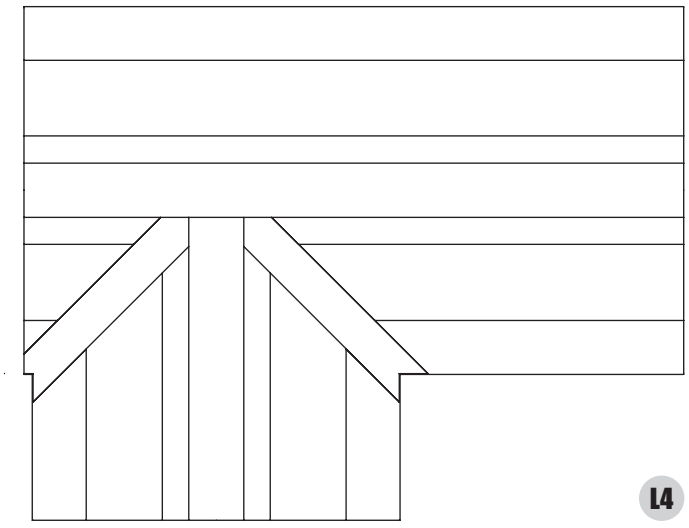

Step 15:

ATTACH ROOF FASCIA BOARDS (BARGEBOARDS) & FINIAL

- Attach roof fascias using 4x N40 per fascia board. Nail through top purlin and bottom roof batten. Complete the look with finials over the join at apex. Secure using 2x N40 per finial.
  NOTE: THERE ARE NO BARGEBOARDS SUPPLIED FOR LOW SIDE OF ROOF AS THIS WILL PREVENT EFFECTIVE WATER DRAINAGE.

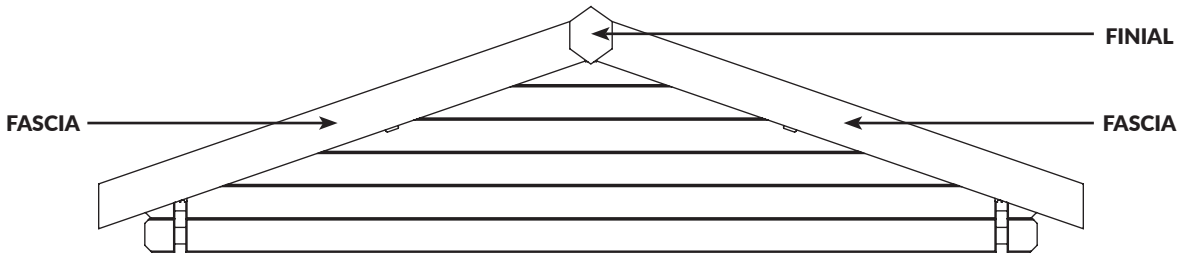

Step 16:

LAY FLOORBOARDS

- Start to lay the floorboards. There should be a 2.5mm gap between the edge of the floorboards and the outer logs to allow for expansion and contraction.
- Nail the floorboards to the tanalised bearers below with 2x BG40 evenly spaced per floorboard per tanalised bearer.
- The last board will need cutting down to size. If installing any partitions, please return to Step 6.

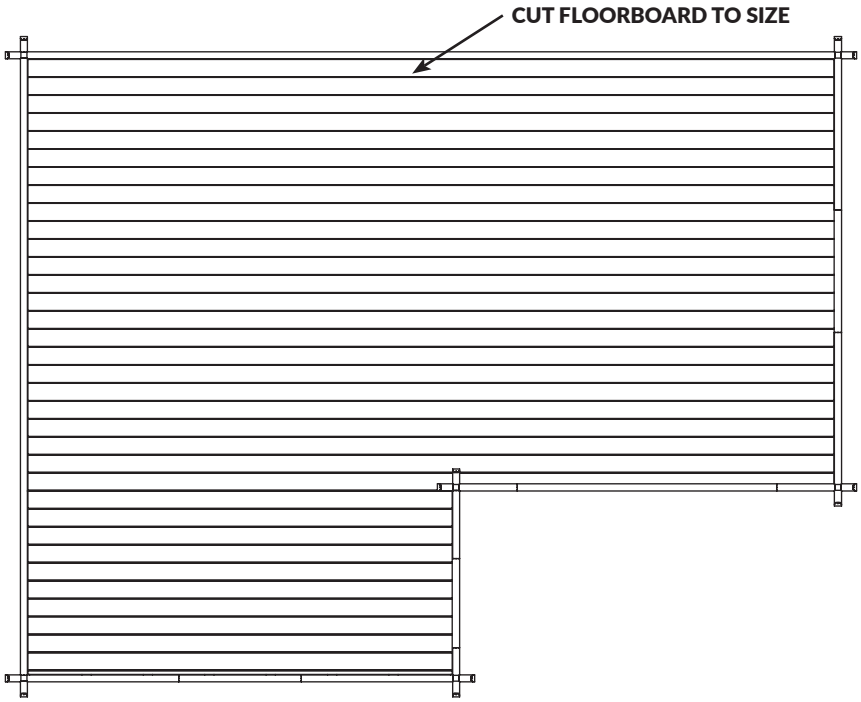

Step 17:

FIXING DOORS AND WINDOWS

- Check the doors are square and screw the fascia boards, both internally and externally, into the logs behind with 6x S40 evenly spaced as shown. ***(Detail M1)***
- Repeat process for all remaining doors and windows in your cabin.

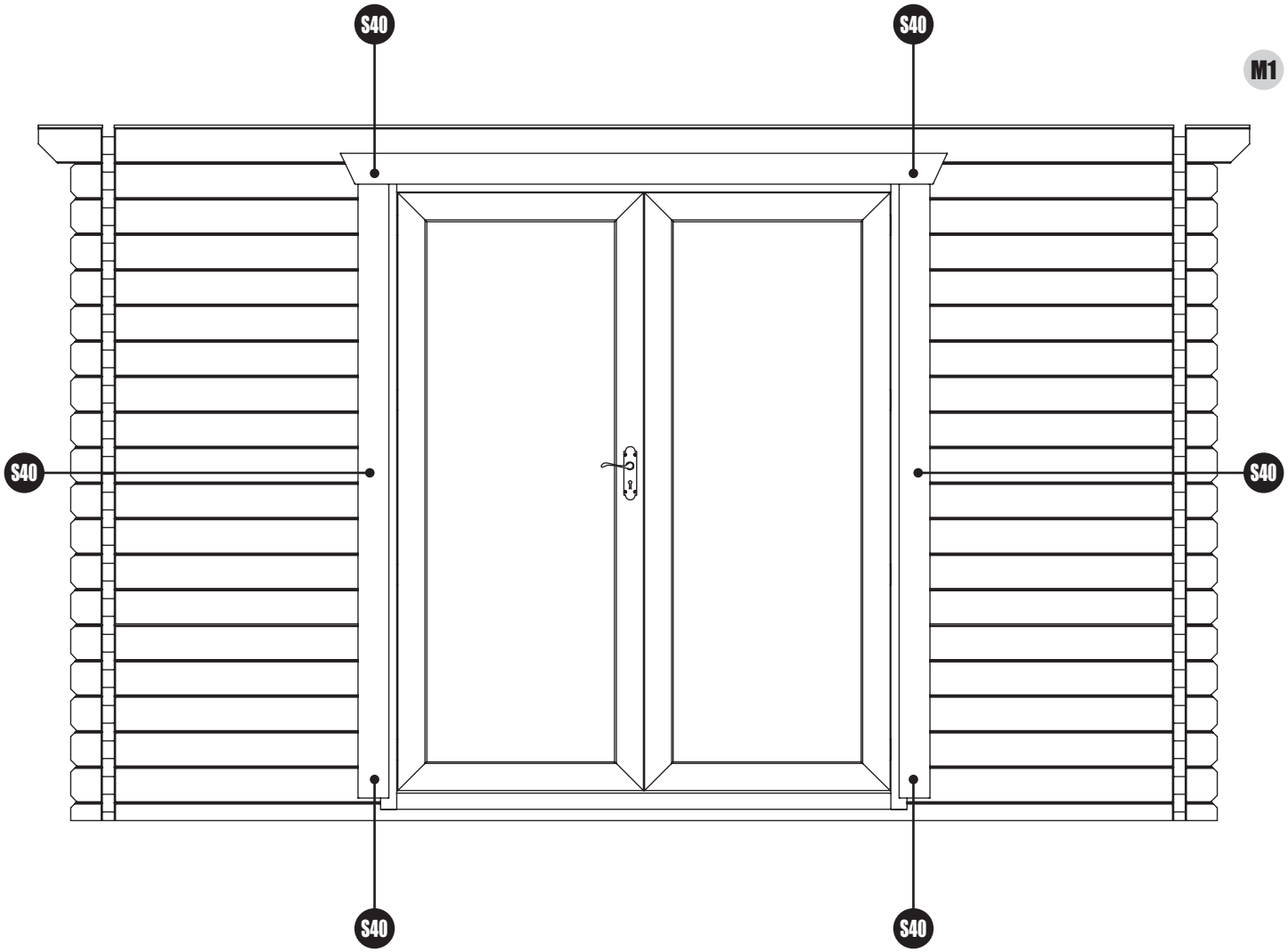

Timber is a natural product; any log or board can expand and contract. This may cause slight gapping in the log cabin which can be rectified by un-screwing and re-screwing fascia boards over the course of the year.

Step 18:

INSTALL INTERNAL ROOF BATTENS

- Fix internal roof battens to the top side logs using 4x S40 evenly spaced along the batten as shown. ***(Detail N)***
- These will seal roof and side walls.

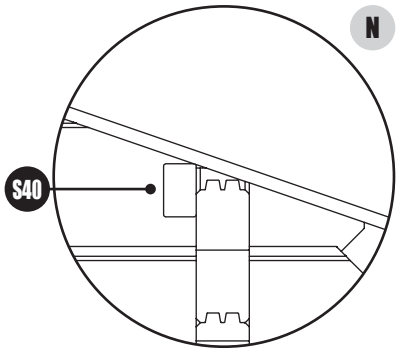

Step 19:

FIT INTERNAL SKIRTING

- Arrange the skirting around the outside edge of floor (internally), measure and cut down if required to best match the internal space.
- Secure each skirting section into place using 3x S40 evenly spaced along the length. ***(Detail O1 & O2)***
  NOTE: DO NOT FIX THE SKIRTING TO THE FLOORBOARDS.

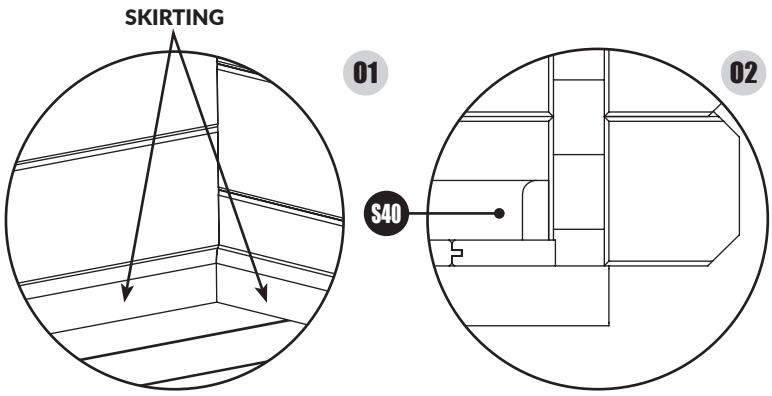

Step 20:

ATTACH STORM BRACES

- Fix storm braces to the inside of gables with 2x CB40 provided. Always leave the bottom CB40 slack enough to let the storm brace move as the cabin expands and contracts. ***(Detail P1 & P2)***

NOTE: ENSURE THE STORM BRACES ARE SECURED INTO THE GABLE TOP ON EACH SIDE.

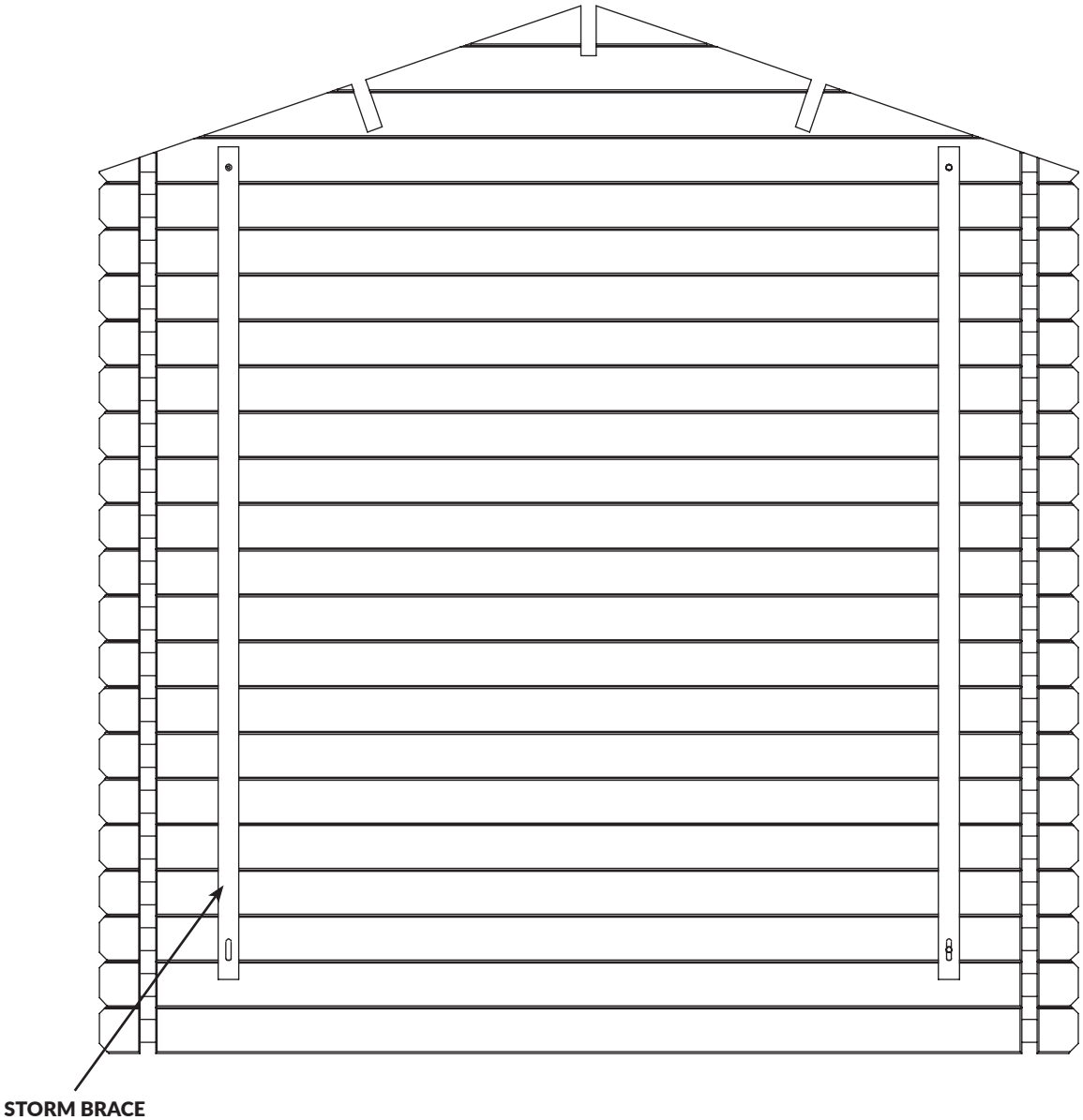

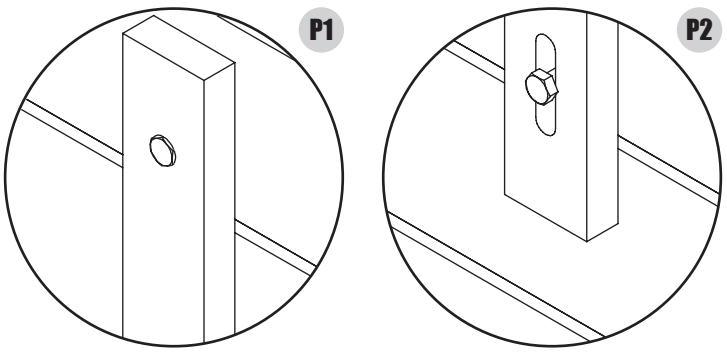

Head Office

Calverley Lane,
Rodley,
Leeds,
West Yorkshire,
LS13 1NP

Telephone: 0113 205 4189
Website: tigersheds.com
Email: customersupport@tigersheds.com

SCAN CODE!
TO SEE GENERAL ACCESSORY & INSTALLATION VIDEO LIBRARY